This is a digital copy of a book that was preserved for generations on library shelves before it was carefully scanned by Google as part of a project to make the world's books discoverable online.

It has survived long enough for the copyright to expire and the book to enter the public domain. A public domain book is one that was never subject to copyright or whose legal copyright term has expired. Whether a book is in the public domain may vary country to country. Public domain books are our gateways to the past, representing a wealth of history, culture and knowledge that's often difficult to discover.

Marks, notations and other marginalia present in the original volume will appear in this file - a reminder of this book's long journey from the publisher to a library and finally to you.

Usage guidelines

Google is proud to partner with libraries to digitize public domain materials and make them widely accessible. Public domain books belong to the public and we are merely their custodians. Nevertheless, this work is expensive, so in order to keep providing this resource, we have taken steps to prevent abuse by commercial parties, including placing technical restrictions on automated querying.

We also ask that you:

+ *Make non-commercial use of the files* We designed Google Book Search for use by individuals, and we request that you use these files for personal, non-commercial purposes.
+ *Refrain from automated querying* Do not send automated queries of any sort to Google's system: If you are conducting research on machine translation, optical character recognition or other areas where access to a large amount of text is helpful, please contact us. We encourage the use of public domain materials for these purposes and may be able to help.
+ *Maintain attribution* The Google "watermark" you see on each file is essential for informing people about this project and helping them find additional materials through Google Book Search. Please do not remove it.
+ *Keep it legal* Whatever your use, remember that you are responsible for ensuring that what you are doing is legal. Do not assume that just because we believe a book is in the public domain for users in the United States, that the work is also in the public domain for users in other countries. Whether a book is still in copyright varies from country to country, and we can't offer guidance on whether any specific use of any specific book is allowed. Please do not assume that a book's appearance in Google Book Search means it can be used in any manner anywhere in the world. Copyright infringement liability can be quite severe.

About Google Book Search

Google's mission is to organize the world's information and to make it universally accessible and useful. Google Book Search helps readers discover the world's books while helping authors and publishers reach new audiences. You can search through the full text of this book on the web at `http://books.google.com/`

HN LEIJ B

TEXT-BOOK
OF
ORDNANCE AND GUNNERY

NAVAL B. L. R. GUNS

1887

MEIGS-INGERSOLL

Digitized by Google

Digitized by Google

Digitized by Google

Digitized by Google

Oliver

Digitized by Google

Digitized by Google

TEXT-BOOK

OF

ORDNANCE AND GUNNERY

NAVAL B. L. R. GUNS

PREPARED AND ARRANGED FOR THE USE
OF NAVAL CADETS

BY

LIEUTENANT J. F. MEIGS, U. S. N.

AND

LIEUTENANT R. R. INGERSOLL, U. S. N.

SECOND EDITION.

REVISED AND PARTIALLY REWRITTEN.

1887.

Digitized by Google

KF 8119

HARVARD
UNIVERSITY
LIBRARY
21 aug 1947
Oliver N. Hollis

Copyright, 1887, *by*
J. F. MEIGS AND R. R. INGERSOLL.

PRESS AND BINDERY OF
ISAAC FRIEDENWALD,
BALTIMORE, MD.

Digitized by Google

CONTENTS.

CHAPTER I.

Metals Used in the Construction of Guns, ... 7

CHAPTER II.

Naval Breech-loading Rifled Guns, ... 29

CHAPTER III.

Rapid-firing Guns, ... 49

CHAPTER IV.

Machine Guns, ... 75

CHAPTER V.

Naval Gun Carriages, ... 85

CHAPTER VI.

Explosives, ... 107

CHAPTER VII.

Ammunition, ... 139

CHAPTER VIII.

Armor, ... 151

CHAPTER IX.

Penetration of Projectiles, ... 163

CHAPTER X.

Torpedoes, ... 177

CHAPTER XI.

Principles and Practice of Naval Gunnery, ... 185

CHAPTER XII.

Field Fortification, ... 245

CHAPTER XIII.

Duties of Junior Officers of Divisions, ... 259

Digitized by Google

Digitized by Google

PREFACE.

This volume having been prepared as a text-book for Naval Cadets, for a limited course in Ordnance and Gunnery, should not be taken as a complete treatise on the subjects touched upon in the several chapters.

It is intended to supplement the instruction derived from other text-books used in the course, and to fill a special want at the Naval Academy.

Much of the subject-matter was derived from the following sources: *Proceedings U. S. Naval Institute*, *Proceedings Royal Artillery Institution*, *Publications of Office of Naval Intelligence*, *Ordnance Notes U. S. Army*, *Cooke's Naval Ordnance and Gunnery*, and the *Official Reports of the Honorable Secretary of the Navy*.

Want of space and time for instruction prevents the presentation of more than an outline of several important subjects, and the student is referred to special works on those subjects for further discussion and details.

NAVAL ACADEMY, 1887.

Digitized by Google

Digitized by Google

CHAPTER I.

METALS USED IN THE CONSTRUCTION OF GUNS.

In the definitions and descriptions which follow, the terms *stress* and *strain* often occur, and it is well to have at the outset a clear understanding of the meaning of these terms.

Stress.—The term *stress* is used to denote the system of forces which act to produce alterations of figure and volume of a solid and of its parts.

Strain.—The term *strain* denotes the alterations, of whatsoever nature, in the volume and figure of a solid and of its parts, produced by the *stress* applied to it.

Fracture.—Fracture of a solid occurs when, under the action of a *stress*, a *strain* is carried so far as to cause actual division of the solid into parts.

Kinds of Strain.—To each kind of stress there corresponds a kind of strain, as follows: For *longitudinal stress* we have a *strain* either of *extension* or *compression;* and, if the strain is carried far enough, a fracture will occur by *tearing*, in the former case, and by *crushing* or *cleaving* in the latter case. For *transverse stress* we have the *strains* of *distortion*, *torsion*, and *bending*, which, if carried far enough, produce fractures by *shearing*, *wrenching*, and *breaking across*, respectively.

Physical Properties of Metals.—Metals have the following properties, to a greater or less degree, with which we are more particularly concerned in the case of metals used in gun construction. The principal properties are *malleability*, *ductility*, *hardness*, *toughness*, *tensile strength*, *elasticity;* and it should also be clearly understood what is meant by the terms *elastic strength* and *elastic limit.* These terms will be defined in succession.

Malleability.—A metal is said to be malleable when it may be permanently extended in all directions without rupture, by pressure (as in rolling), or by impact (as in hammering).

Digitized by Google

Ductility.—A metal is ductile when it may be extended permanently by traction, as in wire drawing. Only malleable metals are ductile, but their ductility is not necessarily in the same ratio as their malleability.

Hardness.—A metal is said to be *soft* when it yields readily to compression without fracture, and does not return to its original form on the removal of the compressive stress; and, on the other hand, a metal is said to be *hard* when it does not yield readily to compression, that is, when the ratio of the compressive stress to the permanent strain produced is very great. The terms *hardness* and *softness* are, however, only comparative terms when used in describing metals; thus we have hard and soft leads, while any sort of lead is soft as compared with wrought iron, which latter again is called soft when compared with cast iron.

Toughness.—The term *toughness*, as applied to metals, is the property of resisting fracture by bending or rolling.

Tensile Strength.—The *tensile strength* of a metal is the stress or tension required to produce fracture.

Elasticity.—The *elasticity* of a metal is the property it possesses of resisting permanent deformation when subjected to a stress, and is measured by the ratio of the stress to the strain produced, when referred to unit length and area. This ratio is called the *modulus of elasticity*. The elasticity of every solid is sensibly perfect when the strain does not exceed a certain limit. For every solid, however, there is a limit which, if a strain exceed, a permanent set or permanent alteration of volume or figure is produced. The limit of the stress beyond which a permanent set will be produced is called the *elastic strength*, while the limit of the corresponding strain is called the *elastic limit*. For metals the *elastic strength* is much less than the *tensile strength*, or the stress which will produce fracture. When a metal is submitted to a stress of tension and its *elastic strength* determined, this quality is called its *elastic strength for tension*, and when its elastic strength is determined by compressive stress it is called the *elastic strength for compression*.

The physical properties of metals which are most necessary in gun making are great tensile strength combined with high elastic strength, elasticity, toughness, and the requisite hardness to endure the wear in the bore due to the erosive action of the powder gases and the friction or balloting of the projectile.

Digitized by Google

A metal which combines to the highest degree the above qualities is, then, the safest and best for use in making guns. Other considerations than those mentioned, however, often govern the use of metals for gun construction, such as cost of production, reliability of the product, and facilities for manufacture; but, for guns of great resistance and power, metal of the highest quality should be used. Guns have been made of various metals, principally bronze, cast iron, wrought iron, and steel. At the present time (1887), steel is exclusively used for the manufacture of guns of high power for the Navy.

It is impossible to give more than an outline of the various methods of manufacture and qualities possessed by these several metals, in a work of limited scope, and the student is referred to standard works on metallurgy for more details than will be found here. Briefly, we may say of them, with regard to their fitness for gun construction, that

Bronze, an alloy of copper and tin, is an expensive material, too soft for the bores of large rifled guns, and in large and small masses is liable to flaws, due to the want of proper mixture of its constituents. It is tough, but wanting in elasticity and tensile strength.

Cast iron is cheap, easily worked, but of low elastic and tensile strength as compared with other iron, averaging about half that of good wrought iron. It can be fused and cast without difficulty, and is comparatively hard. It is not malleable and cannot be welded, is brittle and uncertain in character.

Wrought iron is almost infusible, but is readily welded. It is soft, having about half the hardness of cast iron, but from its mode of production is liable to contain flaws. Its elastic limit and elastic strength are low; but wrought iron, owing to its ductility, requires a large amount of work to extend it from its elastic limit to fracture, which makes it a comparatively safe material to use for guns, as a gun will give evidence of giving away before actual fracture takes place.

Steel combines more good qualities for use in modern gun making than any other metal yet produced. It is easily fused, is malleable, and is more or less weldable, according as it is comparatively soft or hard. It is tough and elastic, with a much higher elastic and tensile strength than wrought iron. Its elastic limit, or elongation within that limit, is much higher than for other metals, and this quality makes it especially suitable for gun making, in view of

Digitized by Google

the vibratory strains which are set up in guns by heavy charges. The processes to which the metal is subjected in process of manufacture, and which will be spoken of in detail, have the effect of increasing to a great degree its elastic and tensile strength. It has only one element of uncertainty, a want of homogeneity, due to defective manufacture; but this defect is not greater with steel than with other metals, and while it may be said that much has yet to be learned concerning the manufacture of steel, yet steel makers are now producing a metal which for reliability and general good qualities for gun making leaves but little to be desired.

Varieties of Iron.—Although there exists but one elementary metal which can properly be termed iron, yet when this is mixed or alloyed with small quantities of other elements, we have in these mixtures virtually distinct metals which differ widely from one another in characteristics.

These different varieties of iron may be divided into three classes or groups, viz. cast iron, wrought iron, and steel or ingot metal. With regard to the two last named, wrought iron and steel, they differ from each other more in the mechanical treatment they undergo during their production than in chemical constitution.

Iron is obtained from its ores by melting these in large blast furnaces with coke or coal, various fluxes being added, according to the nature of the ores, to carry off the earthy matters. The metal so obtained is run into sand molds in the shape of the well known bars termed "pig iron." The metal in this state as run from the blast furnace is termed "cast iron," and contains various foreign elements —carbon and silicon principally.

A portion of the carbon and other impurities may be removed, but so long as the proportion of carbon exceeds 2 per cent by weight, the metal will possess the characteristic qualities of cast iron, which are, that it may be easily fused, and can be cast into a homogeneous mass of any shape or size; but it is brittle, and cannot be worked under the hammer, either hot or cold. Cast iron contains by weight from 2 per cent to 5 per cent of carbon, which exists in two states, either chemically combined with the iron or mechanically mixed with it.

If we remove the carbon from cast iron so that the amount is less than 2 per cent, we have either wrought iron or steel, according to the amount of carbon removed, the subsequent treatment of the metal, or both combined.

Digitized by Google

Theoretically, wrought iron approaches to pure iron, and contains from .1 to .3 per cent of carbon. Extra soft steels, however, contain no greater proportion of carbon than this. As has been before stated, wrought iron is obtained from cast iron by removing the carbon by puddling or otherwise, and then working it up by hammering or rolling into a useful or marketable form.

Chemical Characteristics of Iron.—Among the foreign substances, as has been mentioned, which are found with iron, that which plays the most important part is, without doubt, carbon. The action of this element, through the changes which it occasions in the physical properties of iron, gives rise to the most extraordinary phenomena in metallurgy. It exercises so powerful an influence that metals which are almost entirely constituted of iron, and which are only distinguishable from each other by the small proportion of carbon which they contain, differ more in their physical properties than many metals chemically different. Chemists distinguish wrought iron, steel, and cast iron from each other by their proportion of carbon, as follows:

In wrought iron, ...	0. to 0.25	per cent.
" steel, ...	0.5 to 1.50	"
" cast iron, ...	2.0 to 5.00	"

When the proportion of carbon is between 0.25 and 0.5 per cent, the metal is a *steely iron*, that is, an iron the properties of which approach as much nearer to steel as the proportion of carbon is greater. If the metal contains 1.5 to 2 per cent of carbon, it constitutes *crude* or *natural steel*, which, by its physical properties, is intermediary between steel and cast iron.

Physical Characteristics of Iron.—But the distinction of the three types by their chemical composition, which furnishes to the chemist a well defined character quite indispensable to know in order to comprehend the reactions which are produced in the manufacture of iron and steel, may be of no utility to the practician. That which is important for the latter to know are the physical properties of these metals, because it is by the examination of such properties that he distinguishes the three types. We will, therefore, first proceed with the study of those physical properties which are the most usual characteristics of these types.

These properties are *malleability*, *weldability*, *fusibility*, and the property of receiving *temper*.

Digitized by Google

Malleability of Iron.—Malleability has already been defined. When metal is malleable, its molecules, under the influence of blows or pressure, slide one upon another without producing fissures, so that the metal becomes thin under the effort exercised, and extends itself in all directions normal to that effort.

Iron is malleable cold, but it is much more so hot. Hence, whenever it is worked, to give it a shape more or less different from that which it already has, we commence by raising it to a temperature between 1650° F. and 2200° F. Between these temperatures it takes any form which the workman wishes to give it—in other words, it lends itself easily to forging.

Steel is less malleable cold than iron; but when it has been heated to a suitable temperature, which, generally, is less than that necessary for working wrought iron, it may be easily forged.

Some varieties of cast iron have, when cold, a certain malleability, and yield to the blows of the hammer; but none are malleable hot. Heated red, cast iron breaks under the hammer—in other words, it cannot be forged.

Weldability.—Heated to a temperature higher than that necessary for forging—a temperature between 2300° F. and 2700° F.—wrought iron and steel become white and brilliant, which workmen call *white weld.* At this temperature the metal becomes slightly soft and pasty. In this state wrought iron and steel acquire a property which they only share with platinum and aluminium—that of being able to unite with each other, or *weld*, in such a way that when compression or a blow acts upon two pieces, heated to this temperature and placed in contact under suitable conditions, they become one perfectly homogeneous body.

As the two pieces just mentioned are in a pasty state when placed in contact as described, their molecules penetrate reciprocally, as will the molecules of two pieces of softened clay placed under similar circumstances, so that it is impossible afterwards to distinguish the two pieces, so intimately are they united.

For a metal to be weldable, either with itself or with another metal, it is necessary that it shall maintain the pasty state long enough. When a substance passes from a solid to a liquid state without passing through the pasty state, or does not remain in the latter state for a short time, it is not susceptible of being welded.

Wrought iron welds very easily with itself. Steel also welds with

Digitized by Google

itself more or less easily, and may even be welded with iron.* But cast iron is never weldable, either with itself or another metal.

Fusibility.—Cast iron passes from the solid to the liquid state at a temperature which, according to its nature, varies between 1900° F. and 2800° F. Steel liquefies at a higher temperature, which is between 2550° F. and 3300° F.

Wrought iron has been regarded for a long time as infusible. By subjecting a small sample to a powerful source of heat, such as a blowpipe with oxyhydrogen gas, or electricity, its reduction to the liquid state has been accomplished; but, up to late years, it has never been practicable in industry to obtain any considerable amount of wrought iron in a state of fusion.†

Temper.—When steel is heated to a red heat and then suddenly cooled, for example by plunging it into cold water, we say that we *temper* it, and this operation, of frequent use in industry, considerably modifies the physical properties of steel. The hardness of the metal is sensibly increased, and becomes greater as the decrease of the temperature has been greater and more sudden, or, as is said, the temper has been *stronger*. The tensile strength also varies very much, but is greater or less according to whether the temper is weak or strong. With a weak temper, the tensile strength reaches its maximum; by afterwards increasing the strength of the temper it diminishes more and more, and finally the metal becomes as fragile as glass. The metal acquires a new property by temper—*elasticity of flexion*. This consists of the quality possessed by a finely tempered steel blade, for example a sabre blade, of returning to its original form when, after having been bent under a certain force, it is left to itself.

The properties of wrought iron are not sensibly modified by temper, which is ordinarily expressed by saying that wrought iron does not temper.

The properties of certain cast irons are considerably modified when, after having been liquefied, they are cooled suddenly; therefore we may say, from this point of view, that cast iron takes temper like steel.

* Cast steel, particularly when it is highly carbonized, only welds with difficulty.

† By burning illuminating gas with pure oxygen, a temperature is developed which is capable of melting not only wrought iron, but platinum. The melting point of wrought iron is given by some writers at 3600° F.

Digitized by Google

To state in a few words the physical characteristics which may serve to distinguish wrought iron, steel, and cast iron, we may say wrought iron is forgeable, weldable, practically infusible, and does not temper; steel is forgeable, weldable, fusible, and takes temper; cast iron is neither forgeable nor weldable, it is relatively very fusible, and is susceptible of being tempered.

Distinctive Characteristics of Steel.—That which particularly distinguishes wrought iron from steel is the property possessed by the latter of receiving temper, that is, of being considerably modified by the action of temper. With a metallurgist, all metal with an iron base which is forgeable and capable of being tempered is steel; if it cannot be tempered it is simply iron.

Definition of Steel.—Reasoning from the foregoing, steel is a *fusible malleable alloy of iron produced in any way whatever, and containing a smaller proportion of carbon or other hardening element than is contained in cast iron, and is capable of receiving temper.*

Processes for Obtaining Cast Steel.—There are a variety of processes for removing a portion of the carbon from cast iron and producing steel, that is, by removing the carbon under such conditions as to obtain a melted product; among which may be mentioned that of melting in crucibles, giving *crucible steel;* the open hearth plan, giving Siemens or *Siemens-Martin steel;* the plan of blowing air through molten cast iron, producing *Bessemer steel.* In whatever way made, the material is essentially the same, depending upon its chemical composition and physical structure for its properties.

High and Low Steel.—In consequence of the extension given to the word *steel*, we understand to-day under this name, metals which present considerable differences both in regard to composition and physical properties. Hence, practicians have been obliged to distinguish the varieties of steel according to their proportion of carbon—sometimes by numbers, and sometimes by more or less characteristic names. When the metal contains a large proportion of carbon, it ordinarily is called *high* or *hard steel.* If the proportion of carbon is small, it is called *low* or *soft steel*, and a still smaller proportion will be *extra low steel.* In some manufactories, for example, the name of low steel is given to a metal containing 0.20 to 0.25 per cent of carbon, and a metal in which the proportion of carbon is inferior to 0.20 per cent is designated *extra low steel.*

Digitized by Google

Texture of Iron.—The texture of iron sometimes presents grains analogous to the grains of sand, showing a little coarser grit, and sometimes fibres analogous to those of ligneous plants. In the first instance the texture is called *granular;* in the second, *fibrous.*

Both of these textures agree with that of irons of good quality, and preference should be given to either in accordance with the qualities sought. The property of being wire-drawn is always regarded as inherent in irons of good quality; those which are imperfect in this regard are looked upon as bad irons. The inverse proposition will not be exact; for there are irons of very long fibre, but unequal in soundness, which are of very different quality, such as those containing pernicious foreign substances.*

The texture of iron is sometimes lamellar, that is, presenting plane faces like those of crystals. This texture always indicates an iron of very bad quality.

On this point, one remark cannot fail to be of importance; it is, that the texture varies, not only with the quality of the metal, but also the manner in which the fracture has been effected. We may, in fact, break a bar of iron in such a manner as to make it present, whatever its quality, either the granular or fibrous texture.† In general, each time a piece of iron is suddenly broken it invariably presents a granular texture; when the rupture takes place gradually, the texture is always fibrous.‡

In order to profit from indications which may be furnished by the examination of the fracture, it is well to operate as follows: Take a specimen of square iron not more than an inch on a side, or a flat bar —say ½ to ¾ of an inch thick. On one of the faces of the bar a cut is made quickly with a cold chisel. Then place the bar on an anvil so

* Irons worked at a high temperature which are very pure, and the molecules of which are very close together, always present a granular texture. When iron has been worked at a relatively low temperature it nearly always presents a fibrous texture. Under the hammer, and more frequently under pressure of the roller, the molecules of the metal, at a low temperature, slide over each other, and consequently arrange themselves in a fibrous form more or less elongated.—*Janoyer.* It is necessary to add that irons very much carbonized are more disposed to take or preserve the granular texture than irons slightly carbonized.

† We suppose always that the texture of the metal is not lamellar; in case it is, the assertion will not be exact.

‡ In the experiments at Shoeburyness on armor plates, iron known to be good fibrous iron has presented a granular fracture under the blow of a projectile thrown at a velocity of 1180 to 1574 feet.—*Percy.*

Digitized by Google

that the incision is up and a little beyond the edge of the anvil, and strike the extremity of the bar so as to break it.

Texture of Steel.—The texture of steel is *always granular; it is never fibrous or lamellar.* The grains of steel are generally finer and of greater uniformity than those of iron.

Low and extra-low steel, which, we repeat, are only iron obtained in the liquid state, present, like steel, properly speaking, a very fine and uniform grain, and it is particularly to this peculiarity that they owe the privilege of bearing the name of steel.

Density.—Density furnishes useful information, not only as to the nature of the metal, but as to its quality; for the tensile strength and, we might say, the quality of the metal generally increase with its specific weight. A great density indicates that the molecules are closer together, from prolonged working, and consequently it has been well worked. It also indicates that the metal contains little foreign matter, such as earthy substances, or oxides, constituting flaws, etc.; such substances have much less density than iron, and their presence is announced by a diminution in the density of the metal. Finally, in the particular case of cast iron, density assures us that the latter contains no blowholes.* This is one of the reasons why officers charged with the reception of projectiles should determine their density, and assure themselves that it is not inferior to an established minimum.†

Steel is the densest of the three metals: its mean density is 7.78. That of wrought iron varies from 7.78 to 7.60, according to its quality; in irons of bad quality it may descend as low as 7.30. In cast iron the density is as much greater as the color of the metal is brighter; it varies from 7.00 to 7.30 for gray iron, from 7.25 to 7.40 for mottled, and may rise as high as 7.50 for white iron.

Steel for Guns.—Steel, when required for guns, is cast in large masses or ingots, which are afterwards hammered or pressed into shape for use in the various parts which make up a gun.

The proper proportions of carbon and other constituents of the steel used for guns it is not necessary to discuss here, each manufacturer having his own formula; but it may be said that the proportion of carbon does not exceed 0.5 per cent.

* Blowholes are spaces produced by the gas which passes through the metal in fusion, when it is in the pasty state which precedes solidification.

† Another reason, not less important, is the influence which the density of the metal exercises over the movement of the projectile.

Digitized by Google

The treatment of the ingot after casting or when in the mold is, however, most important, and the good qualities of steel for guns are mainly produced by treatment after the metal is run into the mold.

Whitworth's Process of working steel having been eminently successful, and having also been adopted by leading steel makers in the United States who are under contract to furnish gun steel for the Navy, is worthy of a detailed description at this point. The steel produced by this process is known as *fluid compressed steel.* The system of forging consists in compressing the liquid metal in the mold immediately after casting, in order to get rid of the blowholes and obtain a metal of high density; for subsequent forging, a hydraulic press is used instead of a hammer.

Casting; the Flask.—The flask into which the molten metal is poured is made of steel, and is built up of sections united by broad flanges bolted together in such numbers as to accommodate the length of the ingot to be cast. All molds are cylindrical in form. The interior of the flask is lined with square rods of wrought iron, longitudinally arranged, which form when in place a complete cylindrical interior surface. Where the square edges of these rods meet they are cut away, both on the inside and on the outside, and, at intervals of two inches, small holes are drilled through between the rods, forming a channel way from the interior to the exterior for the passage of gas and flame. The interior is then lined with molding composition. The flange at the bottom of the flask, as well as that at the top, is perforated with small holes which act as a continuation to the perforations between the segments of the lining for the escape of gas.

Fluid Compression.—The casting is made directly into the mold from the top. On the completion of the casting, the mold is moved (by means of a railway at the bottom of the casting pit, which is a deep trench running parallel to the position of the furnaces) to a position under the movable head of the press, which is allowed to descend until the tup is in contact with the metal in the mold, and in this position it is locked; a shower of metal is induced, which ceases almost as soon as commenced, by the complete closing of the mold. The first impress felt by the metal is due to the weight of the head of the press alone. This pressure is gradually increased from below by hydraulic action, applied by four rams upon the table on which the flask rests, until the pressure exerted amounts to 6 tons

Digitized by Google

per square inch. The interval from the commencement of the pressure until the maximum is reached varies with the size of the ingot, being for a 45-ton ingot as much as 35 minutes. During this time the flow of gas and flame from the apertures in the flanges of the flask, at top and at bottom, are continuous and violent, exhibiting the practical effect of the compression. This pressure is applied by the direct action of steam and pumping engines, and is indicated by a dial. At the end of this time the pump is taken off, and a uniform pressure of about 1500 pounds per square inch is established by attaching an accumulator to the press, and allowed to remain until the metal is sufficiently cooled to insure no farther contraction in the mold.

The contraction in length in the mold during the action of the pump, while the maximum pressure is being reached and sustained, amounts to one-eighth of the length of the ingot. After this effect has been produced, there is no farther advantage derived from the pressure in the way of eliminating impurities, but the contraction in cooling still goes on, and the pressure by the accumulator is considered necessary in order to follow up the metal as it contracts, for the purpose of preventing cracks being started at the end and on the exterior of the ingot by the adhesion of particles of the metal to the sides of the mold.

Forging.—When cooled and reheated, the ingot is brought under the influence of the forging press. The press is hydraulic, with a moving head having the main hydraulic cylinder fixed in it, and it is provided with mechanism for raising and lowering the moving head of the press and for locking the same in any desired position. The press has four hollow pillars screwed part of their length, which are attached to the base of the press by nuts. On the top of the pillars is fixed a cast-iron head or table supporting two hydraulic lifting cylinders, the rams of which are fitted with cross-heads carrying four suspension bars. These bars pass through the moving head, and are connected at the lower ends by cross bars which are fastened to the pressing ram. The moving head works between the base and the top or fixed head of the press, and is raised or lowered by the admission or exit of water from the under side of the rams of the lifting cylinders. The moving head can be firmly and rapidly locked at any height from the base which may suit the work to be operated upon. The moving head, as already mentioned, carries a forging or compressing cylinder which forces a ram

Digitized by Google

down upon the work. By attaching the compressing cylinder to and making it part of the moving head, a short stroke can be employed when forging objects which may vary in size from a few inches to several feet in diameter.

This in general terms explains the working of the ram. The effect produced by it requires to be seen in order to be thoroughly appreciated, and is altogether different from that produced by the hammer. The heated ingot resists the blow of the hammer, but the insinuating, persevering effort of the press cannot be denied. The longer time (several seconds) during which the effort lasts is a great element in its successful effect. As pressure succeeds pressure, the stability of the particles is thoroughly disturbed and a veritable *flow* of metal induced, which arranges itself in such shape as the pressure indicates; the particles are forced into closer contact, and the whole mass writhes under the constraint which it is impotent to resist.

The latest exhibition of the wonderful character of the Whitworth steel has attracted great attention, and may be stated as indicating the present culmination of his success. From a Whitworth 9-inch gun, lately constructed for the Brazilian government, there was fired a steel shell which, after perforating an armor plate of 18 inches of wrought iron, still retained considerable energy. The weight of the shell was 403 pounds, the charge of powder 197 pounds, and the velocity about 2000 feet. The shell is but slightly distorted. The tests of the metal of which it was made show a tensile strength of 98 tons per square inch and a ductility of 9 per cent.

Plate I, Fig. 1, is a front elevation of the hydraulic press above described. D are four hollow pillars secured to the base C of the press by the nuts x. The pillars have screw threads d'' cut upon them along a portion of their length. On the top of the pillars is fixed the cast-iron head B, which carries the lifting cylinders E, in which works the ram F, and to its upper end is fitted the crosshead G, to which are attached two suspension rods H, coupled at their extremities with the massive movable head A. The moving head can be secured rapidly in any position by the nut K. P are spur wheels for the locking mechanism, into which the rack R gears. The handles Q are connected with this mechanism for locking and unlocking the head A. To the under side of the movable head A is bolted the plunger t, which enters the top of the mold, and is brought into contact with the surface of the fluid metal before the head is locked, and the pressure is applied by the large ram L within the cylinder

Digitized by Google

R′. The base of the press consists of a massive foundation C, upon which is placed the large cylinder R′ and ram L for giving the pressure required, while above the cylinder is the table J placed on wheels. When the ram is lowered, and the pressure off, the table J can be run forward for the reception of the mold. When filled with fluid metal, the mold is drawn backwards by a horizontal hydraulic cylinder and ram into its position beneath the movable head A.

The apparatus U is employed to record the movement of the pressing ram, and indicates the reduction in length while the casting undergoes pressure. The slide U, attached to one of the pillars, carries a lug, which is kept in contact with a projecting stop W, fixed upon the table J, so that, as the table rises with the ram L, the slide U is also carried up, and the amount of its movement is registered on the dial V by the pointer Y. The split stops *b*, secured to the pillars by bolts and clips, are to support the head A when the press is not in use, thus relieving the lifting cylinders E.

Fig. 1, Plate II, is a front elevation of the forging press, showing the dial plate and index *f* for indicating the movement *g* of the ram at each stroke. Fig. 2 is a side elevation. Fig. 1, Plate III, is a partial front elevation with swage block D and mandrel *h*″. Fig. 2, Plate III, is an end elevation, with a section of the hydraulic apparatus for withdrawing the mandrels from the forging. Fig. 3, Plate III, is a transverse section of the apparatus. A A A A, Plate II, are the four hollow pillars screwed part of their length, and secured to the foundation B′ by the nuts *d*. B is the cast-iron head that supports the lifting cylinders. The rams O are fitted with crossheads D, from which are suspended the lifting bars E. These bars pass through the moving head F, and are connected at their lower extremities to cross bars G, which are fastened to the forging ram.

By these arrangements the head F and forging apparatus can be lowered and rapidly secured in any position as the dimensions of the work decrease, and great economy is thus admitted in the expenditure of water, time, and power.

The moving head F is locked by means of the locking nuts J, the quick pitch screws S passing through the nuts T and the spur wheels U, the nuts T are rotated by the rack W actuated by the hydraulic cylinder X. The pitch screws S are locked by a small movement of the levers Y, which actuate screws whereby the collars *w* are firmly gripped.

The moving head carries a forging cylinder K, in which the ram

Digitized by Google

Digitized by Google

Digitized by Google

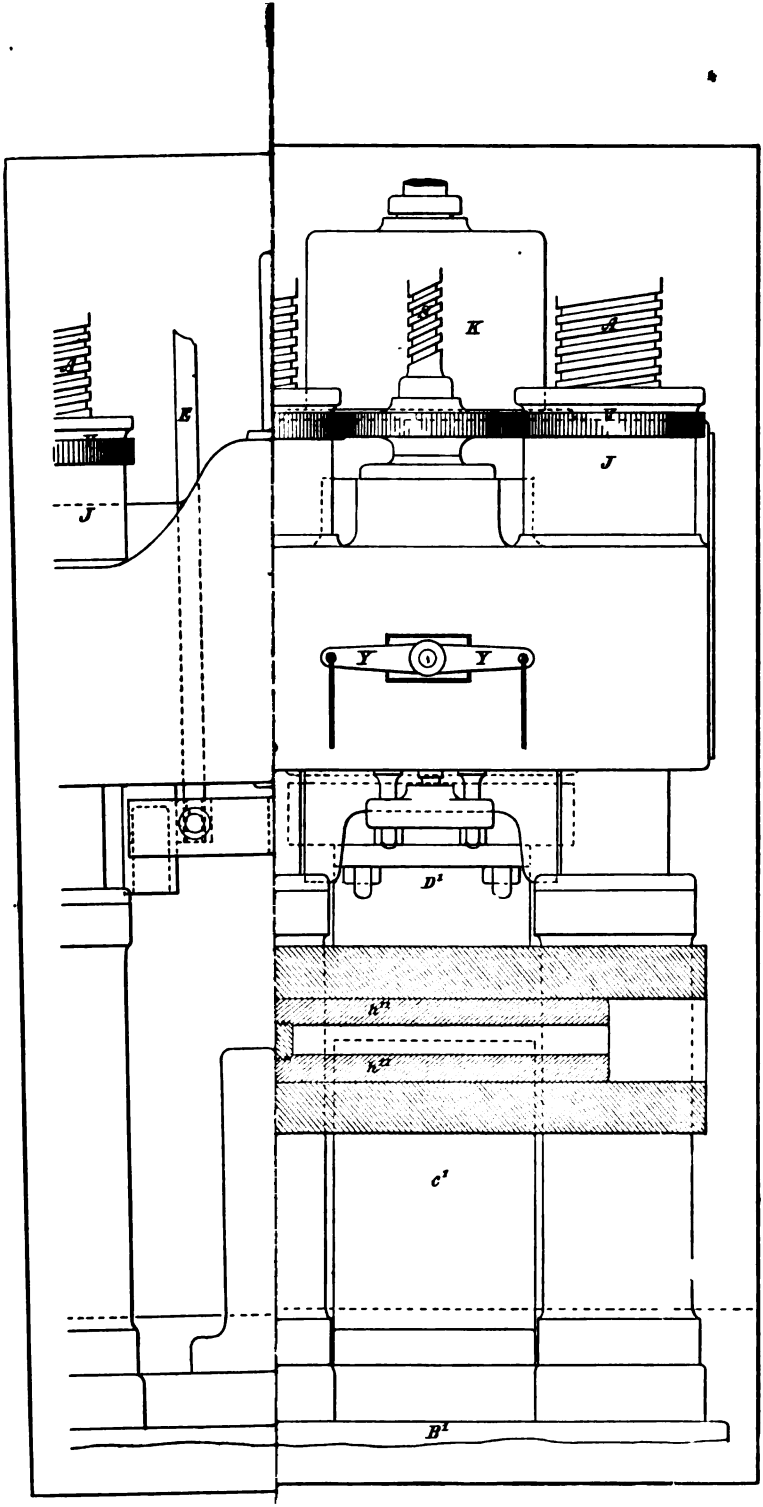

Digitized by Google

Digitized by Google

works. The lifting cylinders, when the press is at work, are kept in constant communication with an accumulator or other source of constant pressure, so that when the pressure is taken off the upper surface of the ram, the pressure acting upon the under side rapidly raises the forging ram.

To indicate the amount of compression effected at each stroke, the dial plate *f* is fixed on the face of the movable head F. The pointer *g* is attached to a pinion which is actuated by the rack *h* attached to the cross bar G.

Split stops, secured around the pillars A by bolts and nuts, are for supporting the movable head F when the press is not in use, to relieve the lifting cylinders of their load.

To rotate the work under operation uniformly, and through an equal space at each stroke of the forging ram, a hydraulic cylinder is fixed vertically to the head B. Its ram is connected by links with a lever. The latter carries a pawl which works in a ratchet wheel attached to the mandrel *h''*, Plate III. As the ram is raised the pawl engages the ratchet wheel, and the mandrel is rotated through a portion of a revolution between each stroke of the forging ram.

To enlarge a cylindrical hoop, such, for instance, as would be required for a cylinder lining, a hollow mandrel of steel *h''* is employed, the ends resting upon suitable supports. The hoop is gradually enlarged upon the mandrel at each stroke of the forging ram which carries the swage block D', the cylindrical form of the forging is controlled by the workmen in accordance with the indications on the dial *f*, and the correct adjustment of the ram which rotates the mandrel *h''*. When a long cylinder is to be forged and drawn out, an apparatus, Figs. 2, 3, Plate III, is necessary to move the short, hollow mandrel *h''* as the work proceeds, and to withdraw it entirely when the hoop is to be reheated. The apparatus consists of a movable cylinder *l*, open at one end and supported by the screw *m* from the carriage *n*, by the gearing *p* and screw *m*. The cylinder can be raised or lowered to suit the different diameters of the mandrels employed. The rod *r* is screwed into the end of the mandrel *h''*, after which the cylinder is brought up by the carriage on the rails *x*. The other end of the rod *r* is passed through the nose of the cylinder and through the piston *q*, the nut *c''* being screwed up to make the joint tight. By the admission of water into the space *d''* the piston is forced out and the mandrel withdrawn. The nose of the cylinder *l* is made hemispherical, and is fitted into a loose cap *v'*, which abuts on the

Digitized by Google

end of the forging, and thus accommodates itself to any irregularity of the forging, and insures that the strain of withdrawal will be applied in a direct line.

Forging by Hammer.—When the hydraulic press is not used, the ingot when cold is taken from the mold, reheated, and worked down under a heavy hammer, with the object of producing high density and homogeneity of metal. The size of the hammer used depends upon the mass in process of forging, but it evidently should be heavy enough to insure the effect of the blow being felt at the interior of the forging. Hammers of 100 tons weight are in use in some of the principal steel works of Europe.

Annealing before Tempering.—The ingot having been forged down to the desired size, is then annealed, especially if the process of forging has been by hammer, in order to get rid of the internal tensions induced by forging. If it be tempered in this state, the various parts of the ingot may dilate unequally and cracks be formed.

To anneal steel, the ingot is heated to a red heat, and then left to cool slowly. The particles thus readjust themselves to a normal condition. This may be done in a furnace by drawing the fires after heating, or by packing the ingot with cast-iron borings or ashes so that it is protected from the air; the process sometimes takes several days for a large ingot.

Tempering in Oil.—The definition of *temper* has already been given. The object to be attained with gun steel is a high elastic and tensile strength, and we have seen that this can be accomplished by a weak temper; hence the bath must reduce the temperature of the steel slowly. The ingot for a part of a gun is usually rough-bored before tempering.

Oil is used as a bath for large tubes of steel calculated to be used as parts of heavy built-up guns, because of the high temperature required to convert it to the vaporous state, and its imperfect conducting quality, which causes the steel to part with its heat slowly. This slow rate of cooling is necessary to form a uniform degree of contraction, thus giving the steel a longer time for the re-arrangement of its particles, and making the strain more uniform throughout the mass.

The effect of the process of tempering is felt throughout the mass just so far as the reduction of temperature is felt, and this is a reason why the parts of guns are rough-bored before tempering, in order

Digitized by Google

that the reduction of temperature may be uniform throughout the thickness; and boring out the centre of an ingot renders this result more certain.

It is evident that as the cooling begins on the outside and inside surfaces of the tube, the metal is contracted and drawn toward those surfaces; hence internal strains are set up which it is desirable to avoid. To this end, rough-bored ingots are sometimes tempered from the interior alone.

The Process.—A tube of steel is lifted by a powerful crane and placed in a perpendicular position in an upright furnace which has been previously heated with wood to a red heat. It rests on an iron shoe placed on the grate bars to prevent the cold air from coming in contact with its extreme end.

Great care is taken to heat the mass uniformly, fuel being added gradually until the whole tube is entirely surrounded with wood thrown in at the top of the furnace.

Wood is used because of its purity; it is not so liable to degrade the steel as other fuels.

The amount of heat received by the steel is judged by eye, and by long practice and attention. The more uniform the temperature, the straighter the block will keep, and the more even its temper. After the steel has acquired the proper uniform temperature throughout, the travelling crane is brought over the furnace, its top removed, and the large iron tongs, pendant from the crane, fasten themselves to the steel tube; a small collar being upon its end to prevent the tongs slipping.

The Oil Bath.—The tube of steel is now drawn out of the furnace and sunk into a large iron tank of suitable depth containing several thousand gallons of oil. The heated steel in passing into the oil will sometimes cause the surface oil to take fire, which is extinguished by closing the top of the tank.

A covering of coal is also formed round the steel by the burned oil, which greatly retards transmission of heat.

The tank has a water space surrounding it, and as the steel parts with its heat, raising the temperature of the oil, the temperature of the water is also raised. The water as it is heated is drawn off by an escape pipe, and a supply of cold water is continually running in, so that the heat is gradually taken from the mass. Exceeding toughness is the result of the operation; the tensile strength of the steel is made higher, and it is harder and more elastic.

Digitized by Google

Re-annealing.—In order to get rid of the internal tensions induced by tempering, the rough-bored ingot is then re-annealed, and after this has been completed, specimens are cut for testing, as the ingot is then ready for delivery to the gun makers.

The Effect on the Physical Properties of Steel of Oil Tempering and Annealing.—The effects of temper vary with the nature of the steel, and are much more pronounced as the steel is more carbonized and homogeneous. The increase of resistance produced by oil temper varies from 79 to 12 per cent, according to Kirkaldy—a very high authority—in the case of high steels tempered at a high temperature and low steels tempered at a medium temperature. Oil temper increases the homogeneity of medium steel by destroying the crystalline texture which the latter frequently presents in the central parts of specimens, and increases its resistance to percussion.

The following table, from tests made by the Navy Department, will give an idea of the effect of oil temper on the physical properties of mild or medium hard steel, for example.

Elastic Strength.		Tensile Strength.		Elongation.	
Before Tempering. Tons.	After Tempering. Tons.	Before Tempering. Tons.	After Tempering. Tons.	Before Tempering. Inches.	After Tempering. Inches.
13	29.2	26.8	45.2	.737	.433
13	27.8	27.8	46.	.707	.345
12	26.0	27.6	39.6	.713	.420
12	25.8	28.0	41.0	.633	.480
13.77	34.15	28.11	49.8	.596	.260
12.18	34.8	26.9	49.4	.564	.202

Thus it will be seen that the elastic strength is more than doubled, the tensile strength raised more than 60 per cent, while the elongation is reduced over 40 per cent.

The annealing process reduces the tensile and elastic strength from 10 to 15 per cent, and restores the ductility, as measured by the elongation, from 25 to 40 per cent.

The Requirements for Gun Steel.—In the first part of this chapter the statement was made that metal used in the construction of guns should possess the qualities of tensile strength, elastic strength, ductility, and elasticity within the elastic limit to the highest

Digitized by Google

possible degree. The heavy strains to which modern guns are subjected require, for a certain weight of gun, steel of high tensile and elastic strength, so that these qualities are to a certain extent fixed; if at the same time a high percentage of ductility is attainable, then the metal is suitable for guns. It is also known that, with medium hard steels, the percentage of elongation within the elastic limit is higher than with low steels, and this quality is one of the first importance.

The following statement of the requirements of the Navy Department in regard to gun steel will show the character of the metal deemed necessary for heavy guns.

All raw material must be chemically analyzed in the most approved manner by the contractor, before use; proper records of these analyses and proper melting records must be kept by him.

Forgings are required to be of open hearth steel of the best quality of raw material, uniform in quality throughout the mass of each forging and throughout the whole order, for forgings of the same calibre, free from slag, seams, cracks, cavities, flaws, blowholes, unsoundness, foreign substances, and all other defects affecting their resistance and value.

Ingots must be cast solid, and have an excess of weight of 40 per cent above that of the rough unbored forging, with specimen ends on. Of this excess, at least 30 per cent of the weight of the ingot is discarded from the upper end and 5 per cent from the lower end. The weight of the original ingot must remain as above, whatever method of forging is employed.

For tubes, plugs, and mushrooms, each ingot must be reduced in diameter, by forging, at least 50 per cent at the largest diameter of the piece, and at no point less than this. For jackets, each ingot must be reduced in diameter, by forging, at least 40 per cent at the largest diameter of the jacket, and at no point less than this. When tubes are forged on a mandrel from bored ingots, the walls of the ingots must be reduced, by forging, at all points in thickness at least 50 per cent, and in case jackets are thus forged, the reduction must be 40 per cent. If hoops are forged from solid ingots, by upsetting and punching and subsequent enlarging on a mandrel, the reduction of the thickness is 33 per cent.

Forgings must be annealed, oil tempered under such conditions as to insure their resistance, and again annealed. The last process, by whatever method followed, must be an annealing one.

Digitized by Google

Trunnion bands are not required to be forged, but are unhammered steel castings, rough-bored and turned, annealed, oil tempered, and again annealed. The following tables indicate the limits upon which the acceptance or rejection of the forgings and castings are based.

TABLE I.

6-inch and 8-inch Guns.	Tubes.			Jackets.		
	A	B	C	A	B	C
Tensile strength, pounds....	80,000	72,000	70,000	85,000	76,500	74,000
Elastic strength, pounds.....	38,000	34,000	33,000	40,000	36,000	34,000
Elongation, per cent.....	22	20	12	20	18	12
Contraction of area, per cent	35	20	15	30	20	15

TABLE II.

10-inch and 12-inch Guns.	Tubes.			Jackets.		
	A	B	C	A	B	C
Tensile strength, pounds....	80,000	72,000	70,000	85,000	76,500	74,000
Elastic strength, pounds.....	38,000	34,000	33,000	40,000	36,000	34,000
Elongation, per cent.....	20	18	12	18	15	10
Contraction of area, per cent	30	20	15	30	20	12

TABLE III.

All Calibres.	Hoops.			Trunnion Bands.		
	A	B	C	A	B	C
Tensile strength, pounds...	100,000	90,000	90,000	90,000	80,000	80,000
Elastic strength, pounds....	50,000	45,000	45,000	40,000	36,000	36,000
Elongation, per cent.....	18	16	12	12	10	6
Contraction of area, per cent	30	25	15	15	12	8

The requirements for plugs and mushrooms are not less than those for tubes and jackets. There has been no difficulty in obtaining steel of this high character. The steel furnished by the Midvale Steel Works for naval guns has equalled, and in very many cases exceeded, these requirements, and, in fact, has equalled the productions of the best foreign steel makers.

Digitized by Google

Determination of the Physical Properties of Metals.—This is accomplished by subjecting specimens of the metal to the action of different stresses in testing machines, and observing the effect on the specimens in alteration of volume and figure by means of accurate measuring instruments.

The testing machines are generally a combination of levers for recording the stress, and a system of gearing or hydraulic machinery by which the stress is produced.

Specimens are usually prepared to an adopted shape. In the case of gun metals they are cylindrical, and are turned to the same diameter for a certain length, usually not less than two inches and not more than ten inches for tensile tests; and in addition, ends are allowed for the purpose of attaching the specimen to the machine. For compressive tests the specimen is also cylindrical, the height being twice the diameter. The capacity of the machine limits the diameter of these specimens.

In making a tensile test the specimen is marked at two points as far apart as the finished length between grips will allow, and the length is carefully measured between these points. The diameter is also measured by micrometer calipers. It is then placed in the machine and subjected to successive tensile stresses, the elongation being noted for each stress, both when the load is on and after it has been removed. When a permanent set equal to the smallest division the measuring instrument is capable of recording is shown, the elastic limit has just been reached within the limits of accuracy of the instruments, and the corresponding stress is the elastic strength of the metal. It is usual to increase the load by small increments when near the elastic strength. If the elongation is not noted, the elastic strength may approximately be determined by watching the weighing lever as the increments of the load are put on, and if the lever remains steady, the limit has not been reached; but when a load is put on and the lever falls after it has recorded the stress, it shows that the metal has permanently stretched. The corresponding stress is then the elastic strength approximately. The elastic elongation should, however, be recorded whenever possible. After the determination of the elastic strength, the specimen is subjected to further stress until rupture takes place. The highest record made by the weighing bar is the *tensile strength*. After rupture, the pieces are joined and the distance between points measured. The percentage of total elongation is thus determined. Similarly, the percentage of

Digitized by Google

reduction of area is found by measuring the diameter at the point of fracture.

To obtain the elastic strength for compression, a compressive stress is put on the specimen, and the height of the cylinder carefully measured: the stress which produces the smallest permanent set observable is the elastic strength for compression within the limits of the accuracy of the instruments.

Finally, the results are reduced to a standard for area and length. Tensile and elastic strengths are expressed in pounds or tons per square inch; elongation, as elongation per inch, or per cent of elongation per total length.

Digitized by Google

CHAPTER II.

NAVAL BREECH-LOADING RIFLED GUNS.

Definition.—A *rifled* gun is so called on account of the spiral grooves which are cut in the surface of the bore, and into which the projections or soft metal bands on the projectile are forced, thus imparting rotation to the projectile about its longitudinal axis when it is driven out of the bore. When the charge and projectile are placed in the gun from the breech end it is termed a *breech-loading gun*, and is generally designated by the calibre in inches, and by the initials B. L. R.

Lands.—The spaces between grooves are called lands.

Rib Rifling.—When the grooves are very wide and the lands very narrow the gun is said to be *rib rifled*, and the lands are called *ribs*. The 3-inch B. L. R. and 47 mm. revolver gun are examples of rib rifling.

Calibre.—The calibre of a rifled gun is the diameter of a cylinder which touches the *highest* points of all the *lands*. In the case of rib rifling it is the diameter of a cylinder which touches the *lowest* points of all the grooves.

High-Powered Guns.—Before the year 1879 a muzzle velocity of 1350 to 1450 f. s. was considered good with a rifled gun, and the power of the projectile to penetrate armor, and the other ballistic properties of the gun, were limited by those velocities. Since that time, by lengthening the gun and increasing the ratio of the weight of the charge to that of the projectile, muzzle velocities near 2000 f. s. are the rule, and in many cases this velocity has been exceeded; recently in England a muzzle velocity of 2500 f. s. has been attained, with the 9.2-inch wire-wound gun, with a projectile weighing 380 pounds. Since the power of the projectile to penetrate armor at a given range depends upon the square of the velocity, it is easily seen that, by increasing the velocity from 1450 f. s. to 2000 f. s. with the same weight of projectile, the power is nearly doubled; hence the term *high-powered guns*, meaning guns with which the attainable

Digitized by Google

velocity is 2000 f. s. and upward, and the term is applied to all calibres.

Length in Calibres.—It has become customary to designate a gun of given calibre as a gun of a certain number of calibres in total length, for example a 30 calibre 6-inch B. L. R. This term, it is true, defines the total length of the gun, but is sometimes misleading as to the power of the gun. The more accurate method of comparing the power of guns of the same calibre is to give the travel of the projectile in the bore in calibres, since a certain power of the travel is a direct measure of the velocity, other elements being equal, and therefore of the power of the gun. (See Table of Elements of Naval Guns.)

The Length of the Bore of a Gun.—The length of the bore of a gun is the distance from the face of the breech plug to the muzzle. The bore of a gun includes the rifled part of the bore, the compression slope against which the shot band takes when loading, and the powder chamber.

Powder Chamber.—The powder chamber is that part of the bore in which the powder charge is placed, and the *capacity* of the powder chamber is the cubical contents of all the space between the base of the projectile and the face of the breech plug, whatever the shape of that space may be. Powder chambers in high-powered B. L. guns are larger in diameter than the remainder of the bore, the reasons for which will hereafter be given. The cylindrical part of the chamber is joined to the compression slope by an easy slope called the *slope of the powder chamber.*

Advantages of Rifled Guns over Smooth Bores.—As compared with smooth bores, rifled guns give greater range, greater penetration of armor for the same weight of projectile and velocity, and very much greater accuracy of fire. At close range, and against unarmored vessels, or against earthworks and troops, the smashing effect of heavy spherical projectiles, combined with the mine power of the shell, is very effective; but, for all around work, especially for all ranges, and particularly in the matter of accuracy of fire—a most important consideration with the limited supply of ammunition now carried—the rifled high-power gun has an immense advantage over a smooth bore; hence they have been adopted by all countries for the armament of ships, fortifications, and for use in field and siege operations.

Digitized by Google

The Advantages of Breech Loading.—It will be assumed that high-powered guns are a necessity. Now, the necessary velocity is a function of the pressure and travel of the shot, other things being equal. It can be attained with a very high pressure in a moderately short gun, or by a moderate pressure in a long gun. In the present stage of the construction of guns and the manufacture of steel the strength of the gun is limited; hence the plan of attaining the high velocity with a moderate pressure and a long travel of the shot has been adopted. The length of the gun, if nothing else, necessitates the adoption of breech loading for naval ordnance, on account of the necessarily limited recoil. But there are other important reasons why breech loading is of advantage; some of these will be given in detail.

Increase in Diameter of Powder Chamber.—As has been said, the development of great power is due mainly to the increase in the weight of the charge of powder, and the full effect of this cannot be felt (without inordinate weight of the gun) except by the use of slow-burning powder in a gun of very great length. If the powder chamber was maintained the same size as the rifled part of the bore, the cartridge would be so long that abnormal pressures or wave pressures, which would endanger the safety of the piece, would be likely to happen. Wave pressures are believed to occur only when relatively very long cartridges are used; therefore the chamber must be greater in diameter than the rest of the bore in order to reduce relatively the length of the cartridge for the same weight of charge.

Rapidity of Fire.—Rapidity without range and accuracy is comparatively of little importance. For heavy guns on shipboard there is a gain of time with breech-loaders owing to a short recoil and automatic return to battery. With rapid-firing guns (so called) breech loading is an absolute necessity, since the cartridge and projectile are put up as fixed ammunition and loaded with one motion.

Exposure of the Crew.—The loading numbers of a gun's crew are better protected by gun shields than is possible with muzzle-loaders.

Labor of Loading.—A long gun being necessary to obtain high power at the present day, the labor of loading such a gun from the muzzle is very great, especially if of large calibre. With a breech-loader the distance for pushing home the projectile and charge is not great, and the labor is correspondingly less. With mechanical appli-

Digitized by Google

ances for loading, the space necessary for breech loading is very much less than what would be required for the same work with muzzle-loaders.

Safety in Loading.—Imperfect closing of the breech is the only source of accident in loading with breech-loaders; but the adoption of various automatic attachments has reduced this source of danger to a minimum. Double loading is impossible with breech-loaders.

Accuracy of Fire.—Speaking of the errors due to the gun alone, the breech-loader is superior to the muzzle-loader. Accuracy of direction depends mainly on the centering of the projectile in the bore, which is much more perfectly attained in a breech-loader than is possible in a muzzle-loader, where some *windage* must exist.

Accuracy of range also depends on the centering of the projectile, but it likewise depends on the uniformity of the muzzle velocity, the latter being dependent on the uniformity of combustion and density of loading. The resistance offered by the rotating band of the B. L. projectile is a very efficient regulator, and assists to secure these important conditions.

Increased Muzzle Velocity.—For the same weight of charge and projectile and same travel of the projectiles and other equal conditions, the velocity will be greater with a breech-loader than with a muzzle-loader, because the rotating band prevents the escape of gas past the projectile and it is all utilized.

Cost.—The first cost of a B. L. gun is greater than that of a M. L. gun of like weight, and the breech fittings may have to be renewed; but in repair of the barrel, where the chief wear occurs, the advantage is on the side of breech-loaders. Taking into account efficiency, and reckoning the cost to perform a given work, the guns which will do the best and most efficient work are in the end the most economical.

Facility for Examination of the Bore.—This is of first importance, and with a breech-loader an examination may be made with perfect ease even during an action. This becomes more and more important every year with the increasing weight of charge and progress in power. Heavy charges have great effect on the metal of a gun, and the life of a gun is correspondingly shortened; hence the necessity for easy and frequent examination of the bore at all points. The damage caused by the premature explosion of a shell in the bore may at once be discovered, while the work of restoring the rifling

Digitized by Google

when damaged is comparatively easy in a B. L. gun, from the convenience of light in the bore and closer contact with the object in hand.

Depth of Rifling with B. L. Guns.—Since the rotating band is forced into the grooves, the diameter of the band being greater than the calibre of the gun, the grooves can be made of less depth than in any kind of muzzle loading. With shallow grooves the strength of the gun is less reduced by the rifling; the number distributes the stress on the gun, and the resistance in the bore can be regulated by the material or thickness of the rotating band.

Practical Questions in Gun Construction.—A *high-powered breech-loading gun* being a necessity, the question arises, how shall the gun be constructed?

A gun may be considered as a tube destined to withstand a given pressure from within, throwing a projectile which shall produce certain effects at given distances. In constructing such a tube, we must first consider what pressures it will have to withstand at the various points of its length, and then make it strong enough to insure perfect safety. The bore also should be of such material as to stand the wear and tear of firing a large number of rounds without being so damaged by expansion or abrasion as to interfere with the shooting.

Not only must the gun be sufficiently strong, but it must not be too heavy; so it is important that the material should be arranged in such a manner that there should be no waste of its strength—in fact, so arranged that every part should perform its own share in withstanding the pressure from within. Shortly after the shot begins to move, the pressure inside the gun gets less, and continues to decrease as the projectile approaches the muzzle; for this reason the gun is made stronger about the powder chamber than toward the muzzle end.

Looking simply to the construction of a gun cylinder, we find that the two principal stresses to which such a cylinder is subjected upon the explosion of the charge are, first, a circumferential or tangential stress or tension tending to split the gun open longitudinally, usually called hoop tension; second, a longitudinal stress tending to pull the gun apart in the direction of its length.

Now, the least complicated method of making a gun would seem to be that of casting it as a homogeneous hollow cylinder; but if we take such a tube, made of one material throughout, we find that its

Digitized by Google

tangential strength to resist a pressure from within does not increase uniformly with its thickness.

We find, practically, that with a given material we soon reach a limit beyond which any additional thickness of wall aids but little in enabling the cylinder to withstand such a pressure. Supposing the metal to be incompressible, this limit is taken at about half a calibre, so that—for example in the cylinder of an hydraulic press—if the thickness of the walls be equal to one-half the diameter of the piston which works inside, then the cylinder will be nearly as strong as if it were ten times as thick.

It is generally conceded that no possible thickness can enable a cylinder to bear a continual pressure from within greater on each square inch than the tenacity of a square inch bar of the same material; that is to say, if the tensile strength of cast iron be 12 tons per square inch, no cast-iron gun, however thick, could bear a charge which would strain it beyond that point; for, on the first round the interior layer would be ruptured before the outer portion could come into play, and every succeeding round would tend to make matters worse.

From the above it is clear that guns made by casting iron, bronze, or steel into homogeneous cylinders cannot be made strong enough to bear more than a certain pressure from within. Now, the working pressure which we require a high-powered gun to withstand is not less than 18 tons per square inch, and we require further that this pressure shall not strain the gun beyond the elastic limit of the metal in order that the bore of the gun shall not be permanently enlarged. Now, the elastic limit of cast steel is from 15 to 20 tons per square inch, and we have seen that steel has a higher elastic limit than either iron or bronze, so that, allowing a margin of safety, it will not do to make a high-powered gun of cast homogeneous metal even when we use cast steel. We must resort, then, to what is termed the built-up system, and it can be shown mathematically that a built-up gun, properly constructed, of the same dimensions and material as a homogeneous gun, is stronger than the latter. A *built-up* gun is one in which the principal parts are separately constructed and then united in a peculiar manner; and guns so constructed may be composed of different kinds of metal, or of the same kind of metal throughout. We now come to the two principles of gun construction which enable strong and heavy guns to be built. They are:

Digitized by Google

1. **The Principle of Varying Elasticities.**—This consists in placing that metal which stretches most *within its elastic limit* around the surface of the bore, so that by its enlargement the explosive stress is transmitted to the other parts exterior to it. This method is exemplified in guns which have a steel tube surrounded by wrought-iron coils, and in the Palliser system, in which a wrought-iron or steel tube is surrounded by cast iron. With different grades of steel—high and low steel for example—the steel which shows the greater elongation within the elastic limit is the more suitable to be placed next the bore. Carrying out this theory in practice is another matter, because in the case of very long tubes there is more difficulty and uncertainty of manufacture with the higher grades of steel than with the lower, and the difficulty increases with the size.

2. **The Principle of Initial Tensions.**—This consists in giving to the exterior portions of the gun a certain initial tension gradually decreasing toward the interior, and giving to the interior parts a certain normal state of compression by the grip of the outer cylinders and coils.

If by the system of initial tensions the interior can be put in a state of compression within the elastic limit of the metal, the amount of compression is so much additional strength to the interior tube, since the compression must be first overcome before the powder gases can exert a tension on the interior tube, as will be shown in the theory of gun construction. In order to exert compression, then, the outer coils or hoops must be in a state of normal tension, and in addition to that they must have a margin of strength within their elastic limits to withstand the additional tension transmitted by the explosion of the charge.

The exact amounts of tension and compression for all parts of the gun when at rest or when resisting the explosion of the charge, so that all parts shall be strained to a point not exceeding their elastic limits, is a matter for mathematical calculation, and is treated at length in works on the theory of gun construction.

The principle of initial tensions carried to an extreme limit would be exemplified in the case of a gun composed of an infinite number of infinitely thin hoops properly shrunk together. When so assembled, the tension in such a gun, when the powder pressure acts, would be uniform throughout the thickness. The greater the number of hoops the nearer this theory is approached in practice, but there are practical difficulties in manufacturing, such as the accurate machine work

Digitized by Google

necessary and the greatly increased cost, so that it is not considered practicable to use more than four layers in the case of guns now designed. In the case of wire guns or ribbon-wound guns this theory is better exemplified, and when successful manufacture is possible in these cases, stronger guns of the same weight must be the result.

Shrinkage.—Practically, the compression of the interior and tension of the exterior is effected in manufacture, after the amounts for each have been calculated, either by *shrinkage*, by forcing two cylinders of slightly coned surfaces upon one another by hydraulic pressure, or by winding steel wire or riband over a steel tube.

If the method of *shrinkage* be employed, the hoops or tubes to be shrunk on must be accurately bored, and the outer coil expanded by heat until it is sufficiently large to fit easily over the inner coil or tube. The inner diameter of the outside coil or tube when cold must be a little smaller than the outside diameter of the inner tube, and this difference of diameters is called the *shrinkage*. While the outer coil is cooling and contracting it compresses the inner one, making its diameter a little smaller than before. The amount by which the exterior diameter is decreased is called the *compression*.

Again, the outer coil itself is stretched on account of the resistance of the inner one, and its interior diameter is slightly increased. This increase is called the *extension*.

The *shrinkage* is always equal to the *compression* plus the *extension*, and the exact amount must be previously calculated by the known extension and compression of various metals under certain stresses and given circumstances.

Heat for Shrinkage.—The heat required in shrinkage is not very great, the temperature not being over 600° F. for wrought iron and steel, though heating a coil beyond the required amount is of no consequence, provided it is not raised high enough to form scales on the surface of the metal; and in all cases the interior of the coil to be shrunk on must be swept clear of ashes, etc., when it is withdrawn from the fire.

With respect to the mode of cooling during the process of shrinking, care must be taken to prevent a long coil or tube cooling simultaneously at both ends, for this would cause the middle portion to be drawn out to an abnormal state of longitudinal tension. In some cases, therefore, water is projected on one end of a coil to cool it first.

Digitized by Google

Digitized by Google

of

Digitized by Google

As a rule, water is applied wherever there is a joint or shoulder, so that that portion may be cooled first and a close joint secured. Water is always allowed to circulate through the interior of the mass, to prevent its expanding and obstructing or delaying the operation of shrinking.

The Thickness of Walls.—Having settled upon the built-up gun as the proper construction to follow, it only remains to describe in general terms how this is practically accomplished.

Experiments with crusher gauges placed at different distances along the bore of a gun, and formulas for constructing pressure curves, have enabled gunmakers to form a good idea of the pressures at different distances from the bottom of the bore. Hence a curve of pressures can be constructed for a given powder that will approximate to the truth for practical purposes; a good margin of safety is always allowed, and the various thicknesses of metal to withstand the pressures at different points of the length of bore follow at once, the calibre and length of gun having previously been fixed by the amount of work the gun is expected to perform.

Naval B. L. R. Guns.—The breech-loading rifled guns for the Navy are the 5-in., 6-in., 8-in., 10-in., 12-in., and 16-in. guns of high power, and are built-up guns of steel, assembled on the principle of initial tension. These are the heavy guns, and constitute the main batteries of U. S. ships of war. The secondary batteries, also breech-loaders, are the 1-pounder, 3-pounder, and 6-pounder and heavier calibres of Hotchkiss guns, the 37 mm., 47 mm., and 53 mm. revolver guns. These will be described in the chapter on machine and rapid-firing guns. The heavy steel guns are represented in Plates IV, V, VI, VII, VIII and IX, and have the same general features.

General Features.—They consist of a steel tube, in one piece, extending the whole length of the bore; a jacket shrunk over the tube from its breech end and extending about two-fifths of the length of the tube; a layer of steel hoops or bands shrunk over the jacket; tapering and locking bands, the chase hoops or bands extending to the muzzle in all calibres except the 5-inch. A trunnion band which serves to lock the parts together is screwed into position so as to give no preponderance in the case of the 5-inch, 6-inch and 8-inch guns. The heavier calibres have no trunnions, the bands over the forward end of the jacket being so shaped as to allow the gun to rest in a saddle. A narrow band is placed around the gun outside of all,

Digitized by Google

in rear of trunnion, in the case of the 5, 6 and 8-inch guns, to which are attached the elevating arcs. The general features, special dimensions, method of locking all parts together to resist pulling apart longitudinally, will best be understood by an examination of the drawings.

The Method of Assembling the Parts of a Built-up Gun.—The parts of a gun being delivered in a rough-bored and turned condition, the turning and boring necessary to the final assembling is next taken in hand, heavy turning lathes of suitable power being used. The turning and boring of the various parts is conducted with the greatest care and accuracy. For measuring interior diameters of cylinders, light steel bars having hemispherical ends are fitted to the exact interior diameter of each piece by the use of a micrometer scale. For measuring exterior diameters fixed calipers are used, which are adjusted by the small steel bars and a micrometer scale to the exact diameters required. The jacket is bored out and finished on the interior as nearly as possible of the dimensions required when assembled. It is then measured on the interior by star gauge at intervals of one inch to one-half inch for its entire length. A table is then formed of these diameters. The tube is then taken in hand, and that part of it over which the jacket fits is turned down on the exterior to diameters corresponding to those of the interior of the jacket at the various points *plus the shrinkage between the tube and jacket.* The amount of the shrinkage is determined by mathematical calculation, and depends upon the qualities and dimensions of the two pieces which come in contact. It may differ considerably, then, in different guns or in different parts of the same gun. The diameters are accurate to .001 of an inch.

The tube and jacket being ready to put together, the former is placed in the shrinking pit muzzle down, on heavy blocks. From these blocks extends a stout iron bar up through the bore and some distance beyond the breech. The tube stands in such a position that the forward end of the jacket when in place will come a little above the floor of the foundry. At the level of the floor is built a water-tight dam, surrounding the tube and about two feet deep. The tube being in place, the jacket is expanded by heating it in a sheet-iron cylinder with a light wood fire, heaping on the wood until the embers cover the entire jacket. At intervals these are brushed aside and the interior of the jacket calipered. When it has expanded sufficiently to allow of its easily passing over the tube, a sling band is put on with set screws,

Digitized by Google

the crane is hooked on, and the jacket is swung over and lowered into its place on the tube; when nearly in its seat, the chain of the crane is let go and the jacket falls five or six inches, thus setting it up hard on the shoulders. In this position a cross bar is placed over the breech, the rod through the bore is attached to the cross bar by means of a nut and screw, and the jacket is thus held firmly in place. At the same time water is put in the dam around the forward end of the jacket, ice being added to keep the temperature down. In this way the jacket is made to nip at its forward end, so that all further contraction is toward this point.

The exterior of the jacket, and also the tube, is prepared for the reception of the hoops by being accurately turned in a lathe to the finished diameter of the hoops at the several points *plus the shrinkage at those points.* The hoops are shrunk on, with the gun horizontal, working from the trunnions each way, the hoops being cooled first at the shoulders, or at points of contact with the preceding hoop, until only the trunnion band remains. This piece is screwed on cold. The narrow band around the cylinder of the gun to which the elevating gear is attached is shrunk on after the gun is otherwise complete. Another plan for shrinking on hoops is an improvement on the above. The gun rests horizontally on a frame; the piece to be shrunk on is placed on a car at such a height that the centre of the hoop corresponds with the centre of the bore. While in this position it is expanded by heat from exterior and interior circles of gas jets. When expanded sufficiently to slide easily in place, the car carrying the hoop is run under the gun to its proper position, a hydraulic press holds the hoop firmly in place, while streams of water from circular pipes cool it at the end at which it should first nip. This method has many advantages, as the hoop can be calipered at any time, thus avoiding overheating, the heat is more uniform, and the hydraulic press holds the piece more firmly in place than the iron rod before described. The tube and jacket of the 12-inch B. L. R. are locked together during the shrinking process by means of a *bayonet joint*, as it is sometimes termed (see sketch), the projections C on the tube being turned after entering the bore of the jacket until they are squarely behind the lands on the jacket. The bore of the jacket is reamed out in rear of the lands to allow the jacket to be turned when over the tube at the proper place. The length of the projections is six inches, and the thickness of the surface opposed to shearing one-quarter inch. After the shrinking is

Digitized by Google

complete, steel keys are driven in the grooves in the jacket to prevent the tube from turning.

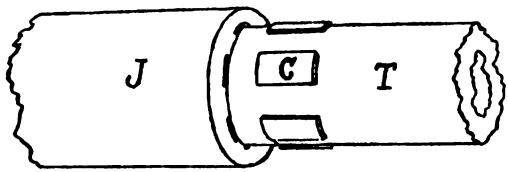

BAYONET JOINT.

The gun being assembled, it is returned to the lathe and its exterior finished down to the required diameters. The bore is then smooth-bored to the diameter of the lands, the powder chamber is reamed out, and the slope of the powder chamber and compression slope formed. The latter work is done by a special cutter, the exact shape of the cone and slopes, which is supported in the cylinder of the chamber and bore.

Rifling.—The gun is now ready to be rifled. It is placed on a planing machine and rests in collars, so that it can be given a motion of rotation as each cut is made. The rifling bar is set in a horizontal position in the prolongation of the axis of the bore, and so secured that it has no motion of translation.

The curve of rifling is cut on the bar in the shape of a slot. Just in front of the muzzle of the gun the bar passes through a support, resting on the planer bed, in which there is a stud which moves in the slot on the bar. As the gun moves forward and backward with the bed of the planer, the rifling bar is made to revolve, by means of the stud in the muzzle support and the slot in the bar, so that the cutter on the end of the bar reproduces the curve of rifling in the bore of the gun. Cutter heads have been designed to cut four or eight grooves at one operation. As each cut is finished the gun is turned in its supports.

Character of Rifling.—The rifling adopted for the B. L. steel guns is of the polygroove system, and an increasing twist from the beginning to a short distance from the muzzle, the remainder being of uniform twist. See Plates X and XI for rifling of 6-inch and 8-inch B. L. R.

The number of grooves is four times the calibre of the gun in inches.

Digitized by Google

Digitized by Google

Digitized by Google

The depth of the grooves is .05 of an inch. The width of the lands is slightly less at the beginning of rifling than at the muzzle; the gradual increase of width of land from the beginning of rifling to the muzzle keeps the rotating band of the projectile pressed into the grooves and prevents the escape of gas past the projectile. See notes, Plates X and XI.

The Breech Mechanism.—The principal requirements which a breech mechanism should fulfill are:

1. That it should completely stop all escape of gas to the rear. It will be evident that however good in other respects, any system which fails in this requirement fails in its primary object.

2. That it should not weaken the gun. In comparison with a muzzle-loader of the same weight, it should not be inherently weaker.

3. That it should not be easily put out of order.

4. That all parts exposed to wear should be capable of being readily and easily replaced. Spare working parts should be capable of being replaced on the spot.

5. It should be easy to work. This is essential to rapidity and continuity of fire.

6. The sealing or "obturation" against the escape of gas should be automatic, and the greater the pressure, the more complete and secure the closing, independent of any perfection of fit of the breech mechanism.

System for R. B. L. Heavy Guns.—The interrupted screw system combined with the De Bange gas check has been adopted for use with the R. B. L. guns for the Navy, as fulfilling the above conditions so far as there is any probability of their being fulfilled at all. In this the breech block has a thread cut on its outer surface, the circumference being divided into six equal parts, and from three of these the threads are cut away longitudinally.

A similarly divided thread is cut in the jacket of the gun. It is evident, then, that the breech block can be pushed home, the projecting portions of the thread on it entering the cut-away parts in the jacket. Various methods have been devised to prevent unscrewing on discharge. In the 5 and 6-inch guns the lever which is used to effect the turning of the breech block is made to fold down across the face of the breech, and as the lever is eccentric about its pivot, a curved part of the lever turns into a slot in the face of the breech, which absolutely prevents the latter from turning until the lever be

Digitized by Google

again raised. A plug tray is hinged to the gun, and the breech block on withdrawal is supported by it and swung aside clear for loading.

The De Bange Gas Check.—The De Bange gas check (see Fig. 1) consists of a large mushroom-headed piece of steel, A, fitted to the block B, the stalk or stem passing through it. The mushroom head fits the bore tolerably closely, and between it and the face of the block, on the stem, is placed the obturator pad. This consists of two plates of steel, S, shaped as shown in section in Fig. 1, and containing between them a ring of asbestos and grease inclosed in a canvas covering and pressed into shape by hydraulic pressure.

FIG. 2.

On firing, the mushroom head is pressed back and forces the asbestos ring out tightly against the surface of the tube at E, completely sealing all escape of gas. A frictionless ring or washer, R (see also Fig. 2), is fitted around the stem, with the idea of relieving the friction when the plug is turned for reloading, the pitch of the screw bringing a pressure on the friction ring as the plug comes to the rear; evidently the plug turns independently. The mushroom is held in place by the nuts N on the end of the stem.

The advantages of the De Bange Gas Check are certainty of action, durability, and ease of adjustment. It requires no great accuracy of workmanship or care in fitting, and it may be changed in case of accident with little delay.

The pad and mushroom project beyond the screw-box in the jacket into the inner tube of the gun, and therefore take up a little

Digitized by Google

Fig. 1.

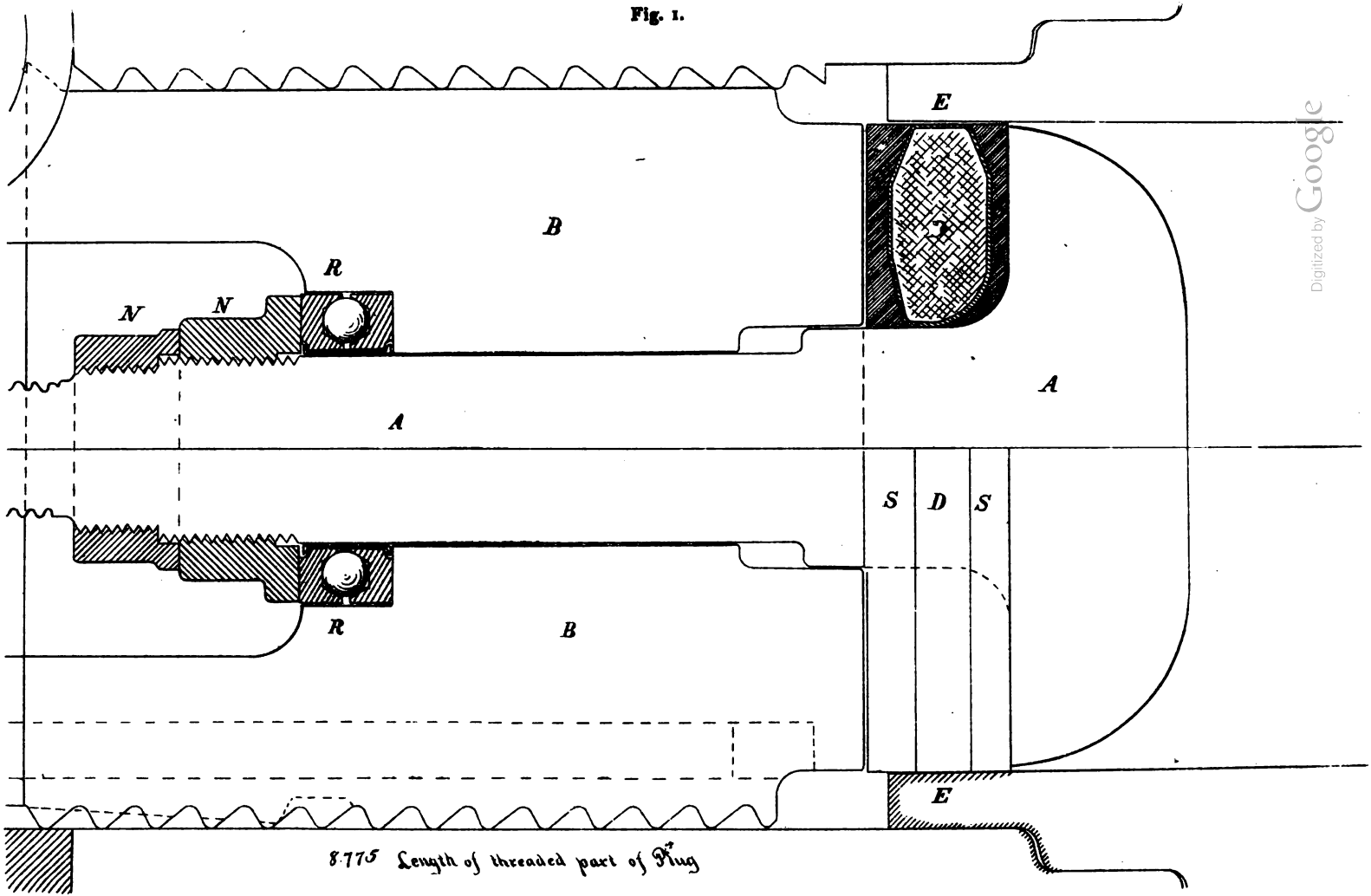

Digitized by Google

Digitized by Google

more room than some other gas checks, but this is a very slight disadvantage compared with its many advantages.

The Vent.—The vent for heavy R. B. L. guns is through the axis of the stem of the mushroom. This position is of advantage in insuring early ignition of all the grains of a charge, especially with pierced prismatic powder, because when put up in cartridges the holes in the grains are coincident, with their axes parallel to the axis of the vent. The vent must be sealed by the firing apparatus, as the loss of velocity due to non-sealing of the vent has been observed with a high-powered gun to be as much as 25 f. s.

The Firing Apparatus.—This is made of steel, and screws on to the end of the stem of the mushroom. It has a spring lock, with firing pin and extractor. A special steel primer is held in the axis of the vent by a block of steel which revolves behind it when it is in position. This block of steel carries the firing pin, which is struck by a hammer when the lock string is pulled. An examination of one of these attachments is necessary to understand the action of all the parts.

Attachments assisting to withdraw the breech blocks are necessary in view of the fact that the gas-check pad fits very tightly in its seat after each discharge. In the 5 and 6-inch guns the folding levers, used to lock the block and prevent it from turning when the gun is fired, are eccentric about the turning pivot. When the lever is turned up to revolve the block, the eccentric part of the lever disengages from the slot in the face of the breech. The block is then revolved to the left until the lever brings up against a stop or stud in the face of the breech. If the plug will not withdraw easily, folding the lever down across the face of the plug brings the eccentric against the face of the breech and starts the gas check by pulling the block bodily to the rear half an inch or more. This brings the pad to a point where the tube is slightly larger than where the gas check seats, and the breech block may then easily be withdrawn.

The mechanism for locking, unlocking, and withdrawing the breech plug of the 8-inch B. L. R. is shown in Figures 3 and 4. Fig. 3 represents the rear—the handle D being omitted—and Fig. 4 the side view, the lower part of the tray *m* being shown in the latter in section.

To close the breech the catch *g* is drawn out, releasing the crank from the arm of the plug, when, by revolving the crank

Digitized by Google

from left to right, the arm of the plug is turned to the right by means of the pinion B and ratchet C. When one revolution of the crank has been made, the catch *g* is again in position to hold it over the arm of the plug, but is prevented from doing so by the pin *f* in the arm travelling on the projection *o*, Fig. 3, which presses it out until its end is flush with the outer surface of the plug arm, so that the catch *g* passes freely over it. The second revolution of the crank brings the arm of the plug against the stop *y*, and at the same time the catch *g* on the crank is forced into a recess in the arm by means of a spring in the handle, and thus the crank being held firmly in position, the plug is securely locked. To withdraw the plug for loading, the crank D, Fig. 4, is revolved against the hands of a watch, which in turn revolves the screw E, on which is a carrier or block, S, into which the lower part of the plug fits when the arm is vertical, as in the plate. It will be noticed that the pitch of the screw increases from the gun towards the crank handle, so that the plug is started slowly but forcibly. When the plug has arrived at the end of the tray, the latch *k* is raised, and the tray bearing the plug is swung around on the hinge *t* by hand, using the handles on the plug for this purpose.

It is proposed to enter and withdraw the breech plugs of the 10-inch and heavier calibres by hydraulic machinery.

Safety Attachments.—To prevent the gun being fired if the breech plug is not securely locked, a tongue is made to move out in front of the firing attachment whenever the breech plug is not locked. In the 5 and 6-inch guns this is accomplished by a rack on the tongue and a small pinion on the axle or pin of the locking lever, the motion of the lever in locking the breech plug withdrawing the tongue from its position in front of the hammer and leaving the latter free to strike the firing pin when the lock string is pulled. In the 8-inch B. L. R. (see Fig. 3), as the arm of the plug travels from left to right, the safety tongue P is drawn up by means of the lug *h*, moving in the slot *i*. Until near the end of its travel the tongue P is down and in front of the hammer of the firing attachment, and does not rise sufficiently to clear it until the plug is in place for firing.

Wire-Wound or Ribbon-Wound Guns.—The very high elastic and tensile strength shown by steel when drawn out in the form of wire or thin ribbon has led to experiments as to the practicability of its use in some form for the construction of guns.

Digitized by Google

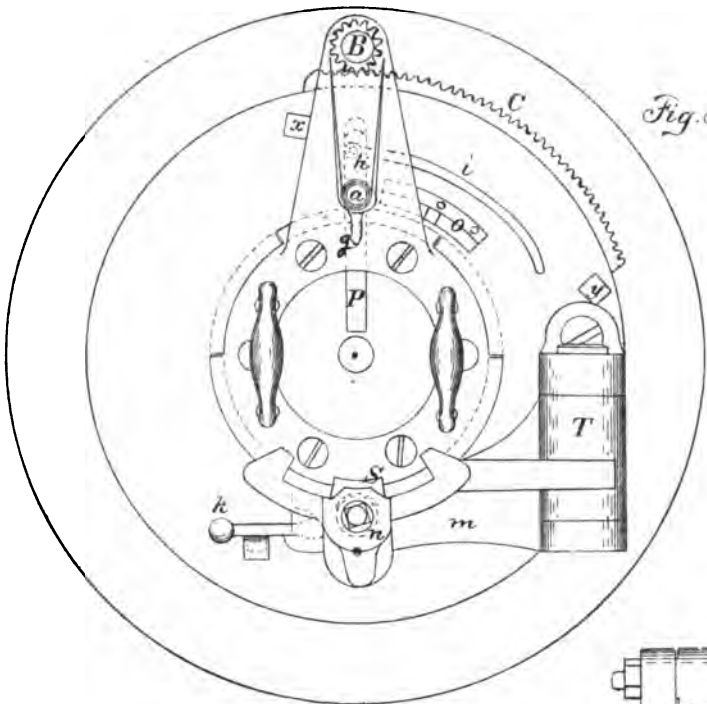

Fig. 3.

Naval 8 inch B. L. R.
Mark III.

Breech Mechanism.

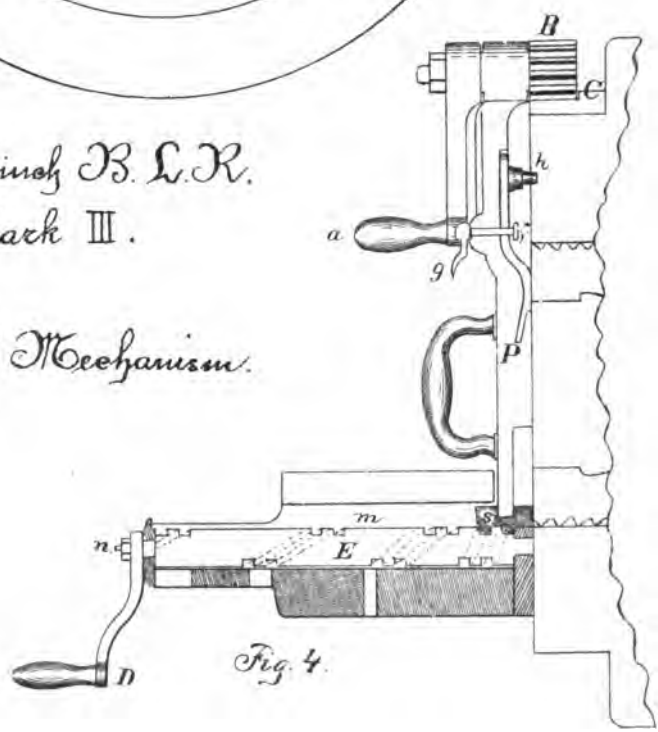

Fig. 4.

Digitized by Google

Digitized by Google

Digitized by Google

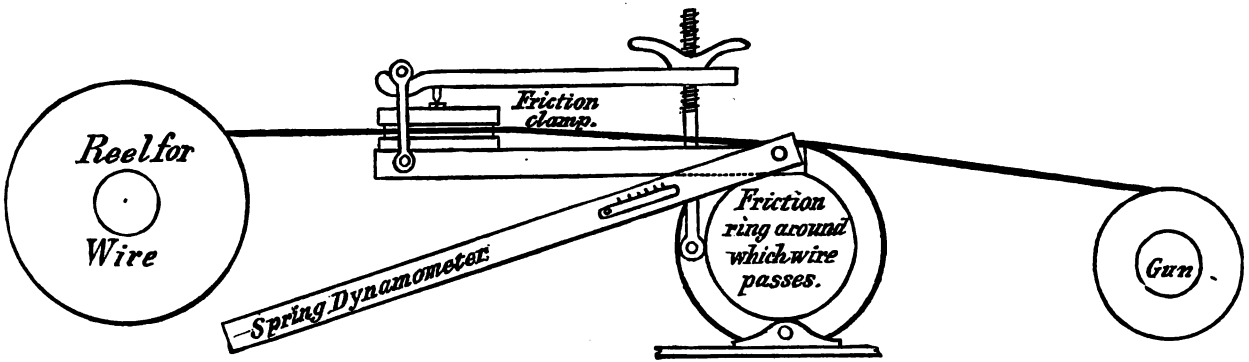

FIG. 5. WIRE-WINDING MACHINE.—May, 1884.

Digitized by Google

Digitized by Google

PLATE XI_2.

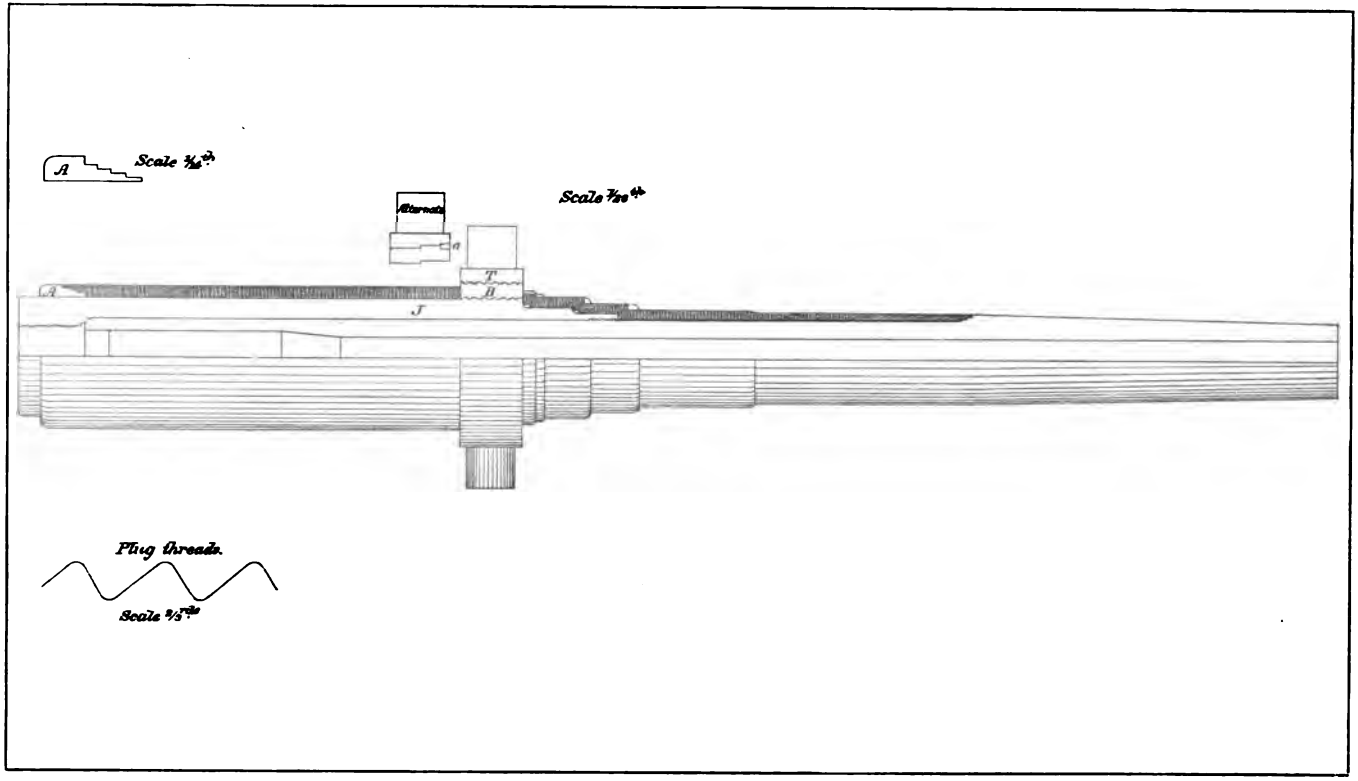

6-INCH W. W. B. L. R.—BUREAU OF ORDNANCE, NAVY DEPARTMENT.

Digitized by Google

Professor Longridge in England, and Dr. Woodbridge in the United States, have been noted for many years for their advocacy of this particular system of construction. As has been said, the strongest possible theoretical strength is attained in a gun, with any given metal, when the gun is so built that the tension will be uniform on each layer from the bore to the exterior when the powder pressure acts, or in other words, when all the layers do an equal share of work. With thick cylinders of steel, such as are used in practice, it is only possible to approach this condition to a limited degree. If a gun could be constructed entirely of wire, wound in the shape of a cylinder, with such a tension for each layer as would insure uniformity of strain when the pressure is exerted, then we should have a close approximation to the desirable theoretical condition. Such a gun, however, while having very great strength to resist hoop tension, would possess no longitudinal strength whatever. Therefore it is necessary to have a core of sufficient resistance to withstand the compressive strain induced by winding, and also to have some means of resisting the longitudinal strain produced by the pressure on the face of the breech plug. Thus it will be seen that it is practicable to have only a portion of the thickness of the walls of a gun composed of layers of wire or ribbon.

Plate XI shows the system of construction of the only wire-wound gun which up to this time has been constructed for the Navy, and in this system it is evident that such a gun is stronger than one of the same dimensions built with hoops, to this extent only, that the wire layers may be considered as so many thin steel cylinders, in which the steel is of nearly double the elastic strength and tensile strength of steel in the form of hoops. The wire used in the construction of this gun had an elastic strength of about 80,000 pounds and a tensile strength of about 140,000 pounds. The wire is ⅛-inch square, and was laid on with a tension varying with each layer.

Fig. 5 shows the general plan of the machine used in winding. The friction clamps and friction ring are faced with some material which will allow the wire to move under pressure without sudden jerks, which would cause the wire to break.

With the wire on the exterior of the gun as in the case cited, it is evident that some means must be adopted to bind the wire together in one solid mass, otherwise, if the gun should be hit with machine gun projectiles, the damage by cutting the outer layers would be very serious. Dr. Woodbridge proposes to solder the wire together, and

Digitized by Google

for this purpose the wire is tinned before winding. It was proposed to heat the completed gun to a temperature high enough to fuse the tin and thus the soldering would be effected. Experiment has shown, however, that the soldering is not at all complete throughout the mass, in fact it is very imperfect; and another serious fault was developed, that the heat necessary to fuse the tin caused the wire to lose some of the tension given by winding, and the strength of the gun was thereby much reduced.

Professor Longridge's plan, which has been successfully tried in England, is to wind the wire on the tube, which is made thick enough to resist the crushing effort induced by winding. Then the whole structure is encased in a jacket of steel, in which the breech plug engages. This plan renders the gun safe from the fire of small projectiles, and what is more important, the wire is placed at a shorter distance from the bore, where its great elastic strength will add most to the elastic strength of the whole gun. When the mechanical difficulties in the way of successfully using steel wire or steel ribbon for a part of the thickness of a gun have been overcome—and it seems to be only a question of time when they will be surmounted—some form of wire or ribbon-wound guns promises to give guns which cannot be destroyed by any powder pressure to which they can possibly be subjected.

Steel Cast Guns.—The Rodman process of hollow casting produced, with cast iron, the strongest guns ever built of that metal. There are many steel makers who believe that the Rodman process may be applied to steel. To be successful so far as to produce a steel cast gun that, calibre for calibre, weight for weight, will equal the elastic strength of a built-up gun, it will be necessary to obtain in some way an initial compression of the bore by initial tension of the outer layers of metal. To attempt to rival a built-up gun of the same calibre and weight in elastic strength by a homogeneous steel cast gun would seem to be impossible, unless the steel used is of almost double the strength of that of the built-up gun. It has been shown also that the theoretical compression of the bore necessary to make it equal in strength is never reached in practice. This form of construction will, however, be tried in the case of three guns now being built for experimental purposes. If successful, the plan furnishes a comparatively cheap and simple process for making guns.

Digitized by Google

TABLE OF ELEMENTS FOR NAVAL GUNS, 1886.

GUN.	Total length in calibres.	Travel of projectile in calibres.	Weight of gun. Lbs.	Weight of carriage. Lbs.	Weight of charge. Lbs.	Weight of projectile. Lbs.	Muzzle velocity. F. S.	Muzzle energy. Ft. tons.	Penetration in wrought iron. Inches.	Common Shell. Length in calibres.	Common Shell. Bursting charge. Lbs.	Steel Armor Piercing Shell. Length in calibres.	Steel Armor Piercing Shell. Bursting charge. Lbs.	Remarks.
16-in. Steel B. L. R.	32.	24.1	110 tons.	.....	1000	2000	2100*	61,114	36.8	3.5	90 (?)	3.	30 (?)	Designed.
14-in. " "	(?)	(?)	75 "	.....	675	1350	2100*	41,270	32.2	(?)	(?)	(?)	(?)	"
12-in. " "	35.24	28.	44 "	.....	425	850	2100*	25,985	27.6	3.5	38.0	3.0	14.	"
10-in. " "	33.0	24.9	58,240	32,482	250	500	2100*	15,285	23.7	3.5	22.	3.0	7.	Constructing.
8-in. " "	32.25	24.6	28,000	20,000	125	250	2050	7285	18.2	3.51	12.	3.03	3.5	Mark II.
6-in. " "	32.25	24.4	11,000	7350	50†	100	2000	2800	13.2	3.48	4.	2.98	1.5	Mark III.
5-in. " "	32.4	24.6	6200	4200	30	60	1915	1525	10.7	3.59	2.	3.01	1.0	Mark I.
3-in. B. L. R. (Howitzers)	16.21	12.88	500 350	535 410	1.0 0.75	7	1140 1087	63 57	3.	...	.8	...	...	
8-in. M. L. R. (Converted)	18.4	12.94	17,350	7500	35	shell 180	1450	2627	8.	...	10.	...	...	
6.4-in. B. L. R. (80-pdr. converted)	21.33	17.9	10,166	7500	10	" 80	1140	573	6.	...	3.11	...	...	
5.3-in. M. L. R. (60-pdr. Parrott)	22.1	17.4	5400	1949	6	" 46.5	1027	.....	5.	...	2.2	...	...	
5.3-in. B. L. R. (60-pdr. converted)	20.8	17.4	5270	1949	8	" 46.5	1140	.....	5.	...	2.2	...	...	
XV-in. S. B. (Monitor)	.....	.....	43,000	18,000	35 to 100	shell 330	931 to 1600	7997	...	Sph	13.	...	...	
XI-in. S. B. (Dahlgren)	.....	.....	16,000	7500	15	" 135.5	1240	.....	...	"	6.	...	...	
IX-in. " "	.....	.....	9000	1250	10	73.5	1320	.....	...	"	3.	...	...	
VIII-in. " "	.....	.....	6000	860	7	52.75	1100	.....	...	"	1.85	...	...	
32-pdr. " "	.....	.....	4500	735	4	26.5	1100 (?)	.....	...	"	9.	...	...	

* Calculated. † Reduced charge 40 pounds. Muzzle velocity 1700 f. s.

Digitized by Google

Digitized by Google

CHAPTER III.

RAPID-FIRING GUNS.

Definition.—The term rapid-firing gun is now applied to all calibres of single-shot guns which use fixed ammunition, that is to say, when the projectile, charge, and primer are combined ready for use, and but one operation is necessary in loading. The breech mechanism also is so constructed that it operates by levers quickly, and this, combined with quick training and quick loading, allows several shots to be fired in a minute, the number depending upon the size of the piece and the weight of ammunition to be handled. They form the principal part of what is known as the secondary battery.

Development.—The progress in the development of rapid-firing guns has been very marked since 1886. The limit of this style of loading would seem to have been reached in a 70-pounder recently built and experimented with successfully by the Armstrong Company.

Rapid-Firing Guns in Naval Warfare.—All ships of war are now designed to carry a number of these guns, some of the heavier ironclads having as many as twenty. In actions against ships they play an important part, especially against unarmored ships. They are used to destroy the unarmored ends of ironclads, to disable the unprotected guns and gun machinery; are used against gun shields, tops, gun ports; and in actions with unarmored ships, against the hull, battery and personnel, the same as heavier guns. The great number of projectiles thrown in a given time, thus greatly increasing the percentage of hits, renders them very powerful adjuncts to the main battery. Their special role is to protect the ship by their continuous and accurate fire, from attacks by torpedo boats, in which duty they are aided by the machine guns, throwing projectiles of one pound and upwards.

How Designated.—Rapid-firing guns are now designated by the weight of projectile which they throw. Those now in use are the 1-pounder, 3-pounder, 6-pounder, and 9-pounder Hotchkiss. A 33-pounder Hotchkiss is now being developed. When the heavy

Digitized by Google

rapid-firing gun, the 33-pounder say, firing from five to ten well aimed shots per minute, is feasible, there can be no doubt that the broadside batteries, of unarmored ships at least, will be composed entirely of these guns. The range is sufficient for modern actions, the flat trajectory insures accuracy of fire, and the rapidity of fire insuring a large number of hits, will enable more damage to be done in the same time than is possible with the same weight of battery distributed among a few guns of heavy calibre. The Hotchkiss rapid-firing guns are high-powered guns.

The following description of the guns and the gun exercises is taken from the Handbook issued by the Hotchkiss Gun Company.

NOMENCLATURE.

The Gun.

Plate XII.

Principal Pieces.—(1) Tube; (2) jacket; (3) locking ring; (4) breech block.

Exterior.—(5) Chase; (6) reinforce; (7) breech; (8) trunnions; (9) rim bases; (10) fore sight mass.

Interior.—(11) (12) Rifled bore; (12) (13) shell seat; (13) (14) powder chamber; (15) breech block mortice; (16) breech block guides; (17) extractor guide.

Holes in Breech.—(Right side) Crank journal; (left side) stock screw seat, stop bolt seat, stock pin seat; (rear face) sight box screw holes; (bottom) pistol grip screw holes.

Plate XIII.

Breech Movement.—(18) Crank; (19) crank stud; (20) crank stud groove; (21) crank handles; (23) stop bolt; (24) stop bolt groove; (25) face plate.

Firing Mechanism.—(26) Hammer; (27) firing pin; (28) rocking shaft; (29) main spring; (30) main spring stirrup; (31) main spring rest; (32) sear; (33) sear spring; (34) trigger; (35) cock notch; (36) cocking toe; (37) cocking cam; (38) pistol grip.

Extraction.—(39) Extractor; (41) extractor stud; (42) extractor stud groove.

Plate XIV.

Accessories: Stock.—(43) Stock screw; (44) stock pin; (45) stock buffer; (46) stock handles; (47) deflector.

Digitized by Google

Plate XII.

HOTCHKISS RAPID FIRING GUN.

Body of Gun.

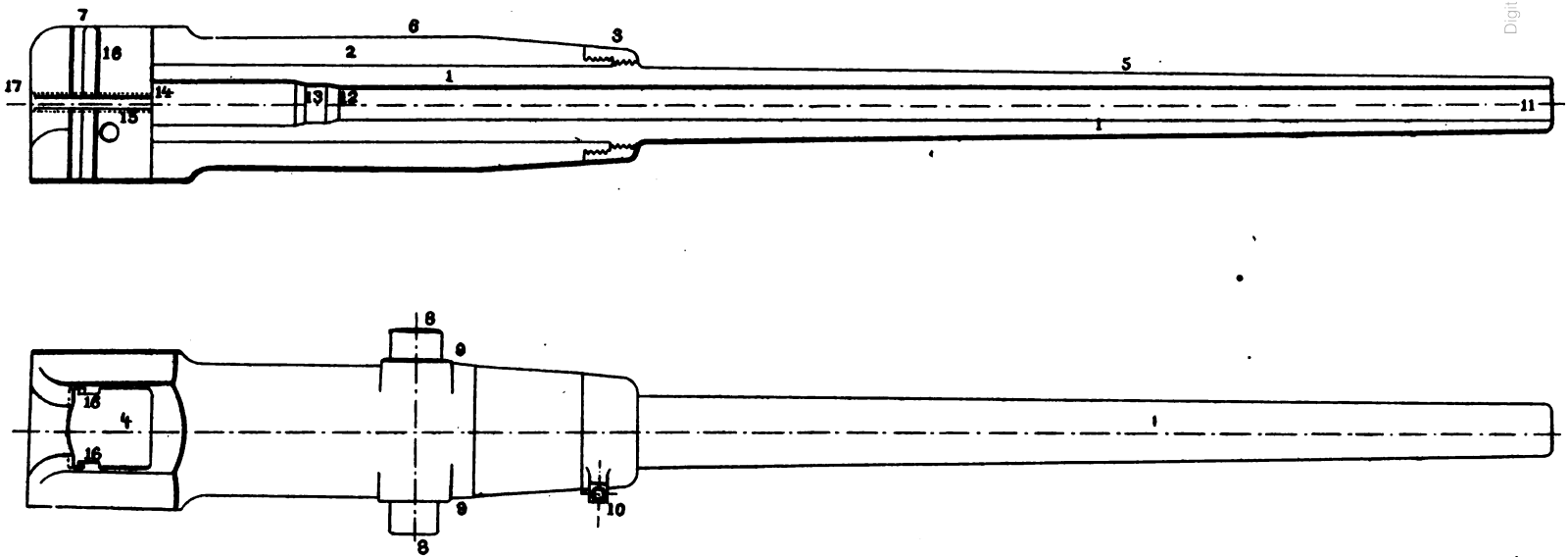

Digitized by Google

Digitized by Google

HOTCHKISS RAPID FIRING GUN.

Breech Action.

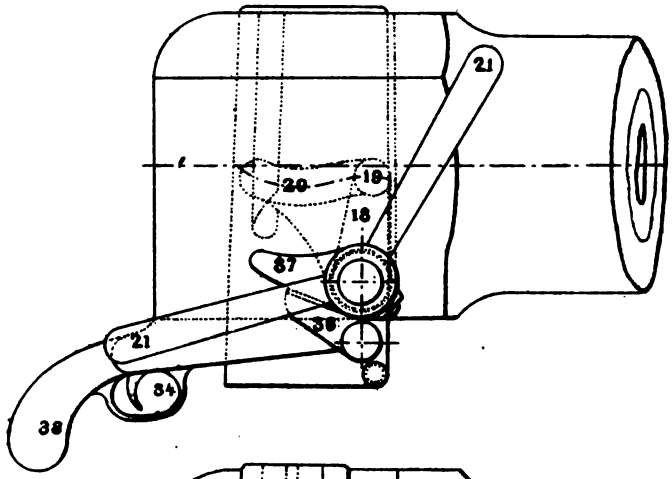

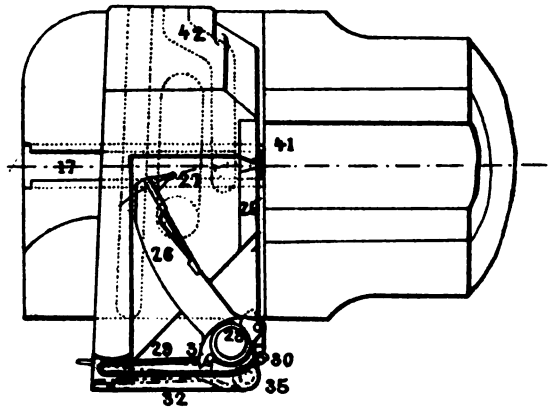

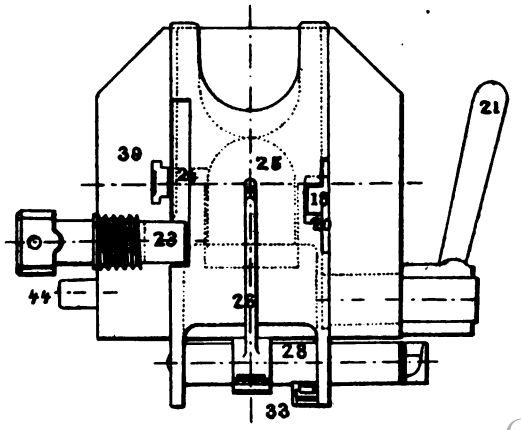

Digitized by Google

Digitized by Google

Plate XIV.

HOTCHKISS RAPID FIRING GUN.

Accessories.

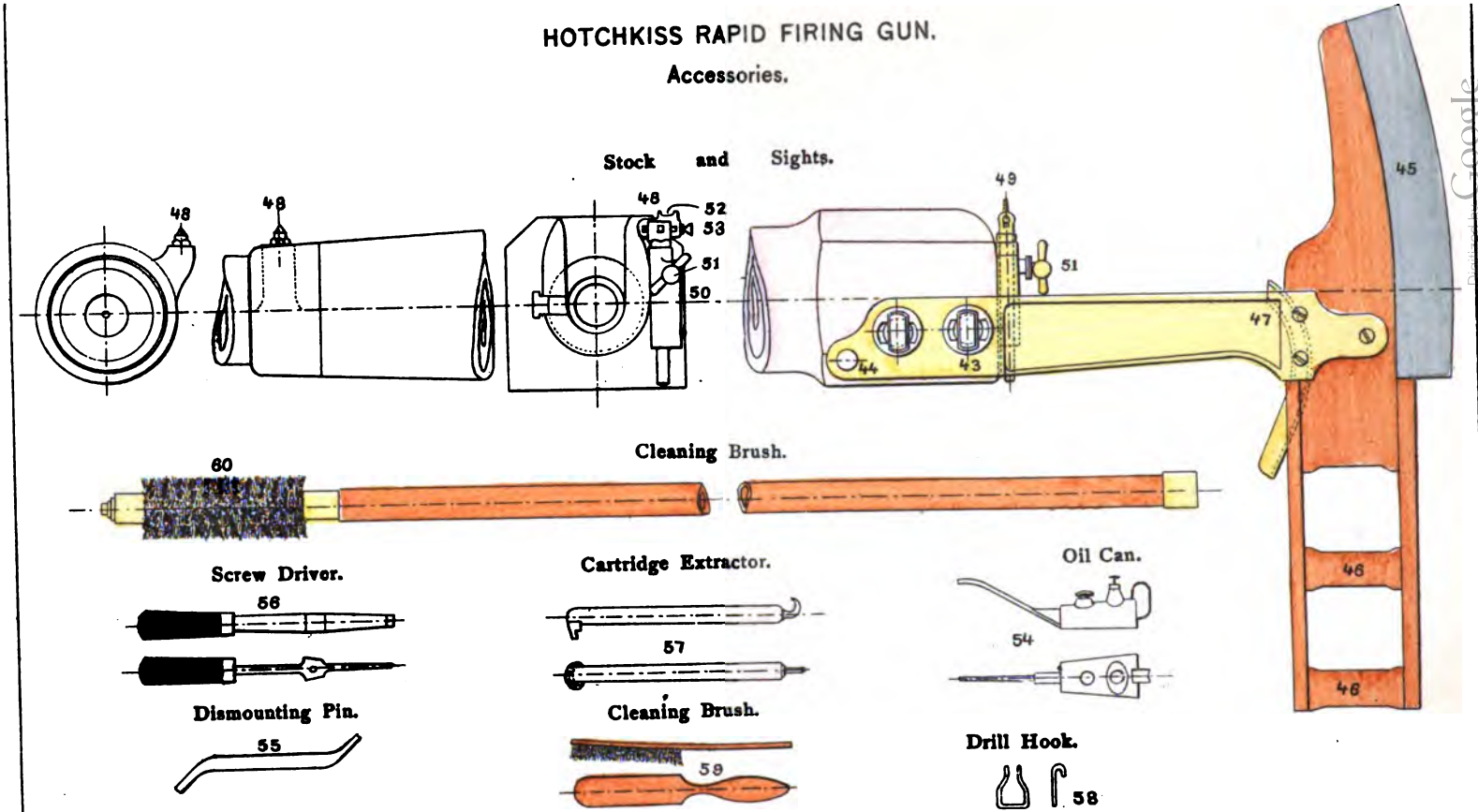

Digitized by Google

Digitized by Google

Sights.—(48) Fore sight; (49) tangent sight; (50) sight box; (51) rack and pinion; (52) sliding leaf; (53) tangent screw.

Supplies.—(54) Oil can; (55) dismounting tool; (56) screw driver; (57) cartridge extractor; (58) drill hook; (59) cleaning brush; (60) bristle sponge.

DESCRIPTION.

The Body.—The body of the Hotchkiss 3-pounder and 6-pounder rapid-firing guns consists of three pieces of oil-tempered steel: the tube, extending from the face of the muzzle to the front face of the breech block, comprising the whole length of bore; the jacket, which is shrunk over the rear part of the tube, and which carries both the trunnions and the breech block; the locking ring, a screwed collar connecting the tube and jacket, and which carries the fore sight mass. By this construction the tube bears the main transverse strains, the jacket bears all the longitudinal strains, the locking ring ensures against the displacement of the tube and jacket.

The Rifling.—The bore is rifled with a right-handed twist; that of the 3-pounder is uniform in pitch, and that of the 6-pounder increasing. The lands of both guns are very narrow in proportion to the grooves, and are twenty in number in the 3-pounder and twenty-four in the 6-pounder.

The Breech Block (4).—The breech block is a square hollowed steel block with rounded corners, having a vertical movement in a mortice cut completely through the jacket. The front face of the block is perpendicular to the axis of the bore, whilst the rear face is slightly inclined. The front upper corner is cut back to allow free movement to the extractor. In the hollowed part of the block is contained the firing mechanism.

The Face Plate (25).—That part of the front face of the breech block which covers the bottom of the bore consists of a removable hard steel face plate dovetailed into the face of the block and secured by two screws.

By the movement of the breech block the breech is opened or closed, the empty cartridge case is extracted, and the firing mechanism is cocked.

The Crank (18).—The breech block is moved and also held fast when closed by the crank, which has a small stud (19) in its end

Digitized by Google

travelling in a groove (20) in the block. The crank is journalled in the right cheek of the breech, and carries on its stem the crank handles (21) and a small spring catch to hold the breech closed.

The Hammer (26).—The hammer is mounted in the middle line of the breech block, and carries a detachable point or firing pin (27), which acts on the primer of the cartridge through a hole in the face plate. It is mounted on a rocking shaft (28), which has a toe (36) on the outside of the breech. When the crank is turned to lower the block, a cam (37) mounted on the crank stem is brought against the toe of the rocking shaft, thus throwing the hammer back and cocking it.

The Sear (32).—The hammer is held at a full cock by means of an ordinary sear actuated by a spring (33), both being secured in the bottom of the breech block. The end of the sear catches in a cock notch (35) on the axis of the hammer.

The Trigger (34).—A loose trigger is carried in a pistol grip (38) secured to the rear of the breech; when the breech block is closed this trigger is brought in contact with the sear, so that by pulling it the sear is pressed down until its end slips clear of the cock notch, allowing the hammer to fly forward and fire the gun.

The Main Spring (29).—The main spring is double branched, and is so fitted as to make both of its branches work on the hammer on opposite sides of the axis of rotation, thus gaining the full power of the spring with almost frictionless rotation. One branch of the spring lies in a rest (31) on one side of the axis, and the other end hangs in a stirrup (30) on the other side. This stirrup also holds the rocking shaft in place.

The Extractor (39).—The extractor is a single piece of steel working in a longitudinal groove (17) in the left cheek of the breech. Its forward end is shaped into a hook to grasp the head of the cartridge. On the same side of the extractor as the hook is a small stud (41), which travels in a groove (42) in the breech block, thus giving motion to the extractor.

The Stock.—The stock is attached to the left side of the gun by three fastenings: the stop bolt (23), the stock screw (43), and the stock pin (44). On the vertical arm of the stock is fixed a buffer (45) of rubber tubing, which prevents the shock of discharge being felt by

Digitized by Google

the gunner. The lower end of the arm is provided with handles (46) to facilitate holding the piece. In order to prevent the extracted cartridge cases from falling on the feet of the gunner, a deflector (47) is attached to the arm of the stock.

The Stop Bolt (23).—When the breech block is run down, it is prevented from dropping clear out of its mortice by a stout stop bolt (23) screwed through the left cheek of the breech, its end travelling in a groove (24) in the left face of the breech block.

The Pistol Grip (38).—The pistol grip secured to the right lower side of the breech carries the trigger (34) and also aids in holding and handling the gun.

The Sights.—The fore sight (48) is a plain roughened steel point. The tangent sight (49) is a bar sight worked by a rack and pinion (51), and graduated to hundreds of yards. It carries a sliding leaf (52) to compensate for drift.

The gun is full sighted; that is, for exact aim the point of the fore sight must be brought in line with the top edge of the sight notch.

The Action of the Mechanism.—The gun having been fired, the action of the mechanism in reloading is as follows:

The breech is opened by pulling the crank handle to the rear. As the crank handle commences to move, the crank stud is carried backward in the part of its groove which is concentric with the axis of the crank, therefore the breech block does not move; during this time the cocking cam acts on the cocking toe and cocks the hammer. The crank stud passing on into the inclined part of its groove, the breech commences to descend. The extractor, actuated by the movement of the block, commences to move very slowly back with a powerful leverage, starting the cartridge case from its seat. When the breech block has descended so far as to unmask the bore, the change in direction of the extractor stud groove causes the extractor to take a quick violent motion to the rear, throwing the cartridge case entirely out of the gun. The breech block is at this point stopped in its descent by the stop bolt.

The gun is ready for loading.

Loading.—The new charge having been entered in the chamber, is pushed home until the head of the case takes against the hook of the extractor; the breech block is closed by a reverse movement of

Digitized by Google

the crank handle. As the block rises, its inclined upper corner pushes the cartridge and extractor close home. When the block is entirely up, its face bears tightly against the head of the cartridge, and the crank has passed the vertical position and rests against the body of the gun, so that the block is held secure in three ways: by its own weight pressing on the crank past the centre, by the reaction of the crank and handles in firing, and by the small spring catch.

Ready.—When the breech is closed the cocking cam is in position to allow the cocking toe and with it the hammer to act in firing. The top branch of the trigger also rests against the sear. On pulling the trigger its top branch presses down upon the sear, releases it from the cock notch, and the hammer flies forward, striking the primer of the cartridge.

Safety.—It is impossible to fire the gun before the breech is entirely closed, for three reasons, viz.: The firing pin is not in line with the primer; the trigger will not act on the sear; the cocking toe will catch on the cocking cam before the firing pin can touch the primer.

It is impossible for the breech to fly open, for three reasons (see *Loading*).

It is impossible to bring a shock on the cartridge primer in closing the breech, as the face of the breech block *slides along* the head of the cartridge, thus giving perfect security in loading and unloading.

The Drill Hook is designed to relieve the mechanism from strain when snapping the gun at drill. Plate XIV clearly shows the manner of application. At drill, or when the piece is secured, the drill hook should remain in place, but when the gun is cast loose for action, *remove the drill hook, and hook the lower branch of the spring to the stirrup;* otherwise a missfire may occur.

Directions for Mounting and Dismounting.—Turn the stop bolt (23) and the stock screw (43) a quarter turn with the dismounting tool; the stock is then loose and will come off the gun.

The breech being closed, partially unscrew the stop bolt (23) by backing it about four turns. Start the crank handle back and ease the block down out of its guides, holding it with the hands as it comes out of the mortice.

The mechanism may be dismounted with the breech block either in or out of the gun. *First uncock the hammer;* if the breech block

Digitized by Google

HOTCHKISS RAPID FIRING GUN.

Drill Hook.

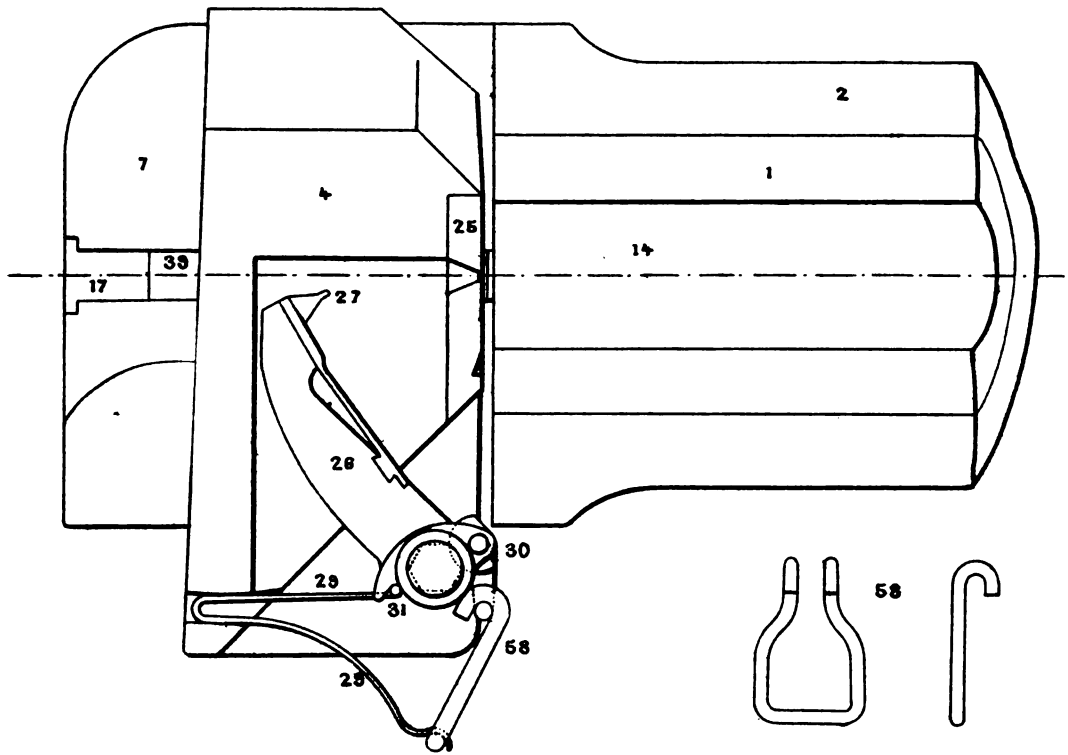

Digitized by Google

Digitized by Google

is closed and the *gun not loaded*, this will be done by pulling the trigger; if the breech is open or the breech block is out of the gun, it will be done by pressing down on the sear.

Insert the point of the screw-driver in the seat of the bend of the main spring, so that the fulcrum side of the blade of the screw-driver will be flat on the branch of the spring; press down and slip the stirrup (30) off the end of the spring. Take out the main spring. Turn the stirrup to a horizontal position, so as to unlock the rocking shaft (28). Pull out the rocking shaft and remove the hammer.

With the point of the screw-driver, back out the sear spring which is dovetailed in its seat.

Take off the sear.

Take out the keep screw in the hub of the crank handle and pull the latter off the stem of the crank. Take out the crank.

Withdraw the extractor from its groove.

Proceed in the reverse way in mounting; *the hammer must be at full cock when inserting the rocking shaft.*

Care and Cleaning Required.—The guns require no special care beyond that of being kept clean, free from rust and undefaced.

Brick dust or gritty substances must never be used on any part of the gun.

The parts of the mechanism must never be scraped with knives or metal, or be defaced or roughened in any way.

All parts of the gun must be kept lightly oiled as a protection from rust.

Always, after firing, the gun should be thoroughly cleaned. To do this, dismount the mechanism completely and wash every part thoroughly with warm fresh water soap suds; mechanism, breech block, mortice and barrel should all be treated alike.

After thoroughly scrubbing all parts, dry them carefully and let all stand for a short time to air and dry off the moisture.

After drying, rub all parts over with a well-oiled rag.

Mount the mechanism.

Keep the gun covered whenever there is a chance of getting grit or salt water on it.

Inspect and re-oil once a week. In re-oiling always first wipe off all the old oil which has become clogged with dust and grit.

Digitized by Google

THE AMMUNITION.

Nomenclature.

Plate XV.

Shell.—(61) Point; (62) shoulder; (63) wall; (64) base; (65) fuze seat; (66) chamber; (67) rifling band.

Case Shot.—(69) Head; (70) body; (71) base; (72) bullets and packing.

Fuze.—(73) Fuze case; (74) plunger; (75) striker; (76) detonator; (77) screw cap.

Cartridge Case.—(79) Neck; (80) body; (81) head.

Primer.—(82) Case; (83) cap; (84) anvil.

Description.—The ammunition is put together in a similar manner to that used in breech-loading small arms, and consists of the projectile, to the base of which is secured a cartridge case containing a wad, the powder charge, and in the base a percussion primer for centre fire.

The Cartridge Case.—The drawn metal cartridge case is of brass, and, as its name implies, is drawn from the solid metal to shape. It is reinforced at the base by inside and outside cups of the same metal. The head (81) is of sheet iron fastened to the base by brass rivets, which clamp the case, cups and head solidly together.

The Primer consists of a small brass case shaped at the top to form an anvil; the bottom is closed by a cap containing the fulminate. When the primer is in place, the reinforcing cups of the cartridge case are pressed up around its seat to form a gas-tight joint.

The Projectiles are of three kinds: common shell, steel shell, and case shot. The two descriptions of shell do not materially differ in construction, except that the base of the steel one is an independent piece, whilst that of the common shell is a part of the casting, and the point of the steel shell is sharp whilst that of the common one is cut off. The two may always be recognized by this difference in shape of point. The shoulder of the shell is very slightly enlarged in diameter to prevent it wobbling in the bore.

Rifling Band.—Rotation is given by means of a brass rifling band (67), which is fitted over a series of small grooves cut around the wall of the shell. The squeeze caused by forcing the shell

Digitized by Google

HOTCHKISS RAPID FIRING GUN.

Ammunition.

Common Shell.

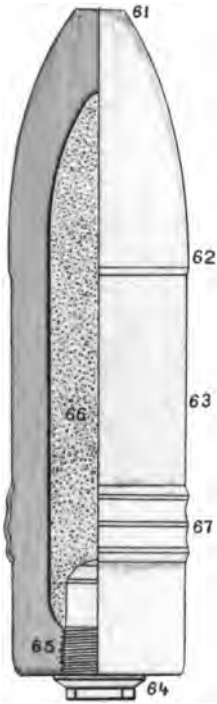

Steel Shell.

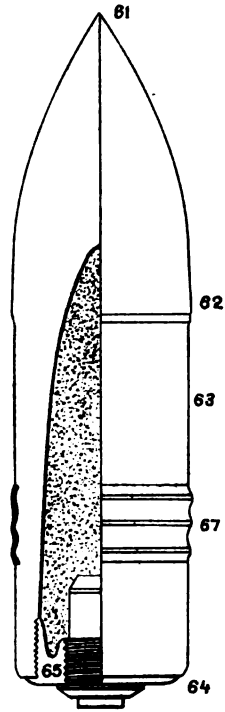

Case Shot.

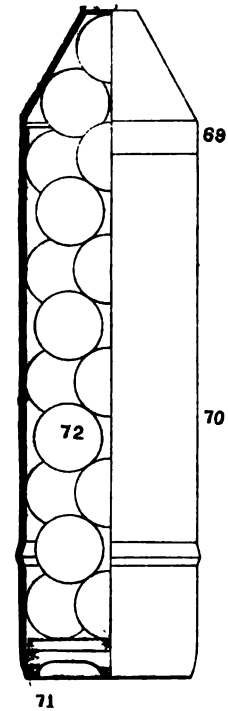

Base percussion fuze.

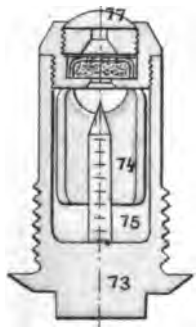

Position of plunger before firing.

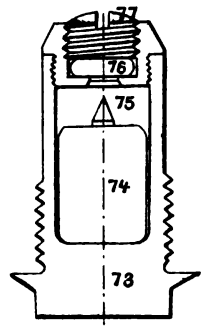

Position of plunger during flight.

Primer.

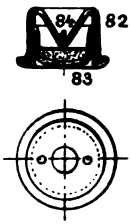

Complete Cartridge.

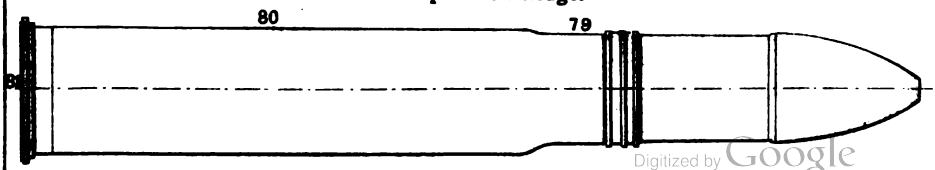

Digitized by Google

Digitized by Google

through the bore molds the band into the grooves, thus leaving barely shearing surface enough to ensure perfect rotation from the lands cutting into the soft metal, whilst the creases caused by the molding give space for an easy flow of the sheared metal. The shells are turned smooth all over, and are finished with great care, the steel ones being specially tempered to give good penetrating power.

The base of the steel shell is made of an independent piece of metal secured into the bottom of the shell, in order to gain the best explosive effect possible. In order to have great penetrative power, the point of the shell must be solid, necessitating the use of a base fuze; the wall of the shell must also be quite thick to resist the shock of impact; the base therefore becomes the weakest point of the shell, so that on explosion it would be blown out without fracturing the wall, provided some means were not employed to counteract this tendency. The independent base is therefore so shaped on the inside, that when the explosion takes place it is pinched both against the wall and the fuze, thus holding all fast until the shell breaks up all over.

The Fuze is of the percussion type and consists of a gun-metal case, the lower exterior being threaded to screw into the base of the shell, and being provided with a broad shoulder bevelled to a thin edge to form a gas check; a plunger (74) composed of a body of lead cast in a cylindrical case of brass and holding a hard brass wire striker (75), roughened so as to give sufficient hold to the surrounding lead. The rear end of this striker projects below the bottom of the plunger, whilst its front end is sunk a little below the front surface, which is hollowed to leave it clear and intact. The entire length of this striker is so arranged that when inserted in the body the rear end of it rests against the rear of the fuze chamber, whilst the front end of the plunger rests against the lower surface of the screw cap, thus holding the plunger steady. The detonator is a small hollow brass cap containing the fulminate, and is held in the screw cap (77) which covers the front of the fuze, and has a vent for communicating with the shell charge.

Action of the Fuze.—When the gun is fired, the powder pressure on the head of the fuze seals it gas-tight, the plunger drives back along the striker, the lead setting up and gripping the wire firmly.

The fuze is then armed and, on the projectile striking any object,

Digitized by Google

the plunger drives forward, the point of the striker detonating the fulminate, which drives its blast through the vent to the shell charge.

Case Shot.—The case shot consists of a thin sheet brass case with a conical head and a gas check bottom of soft metal to take the rifling, being reinforced on the inside with a loose sheet-iron plate. The case is filled with hardened lead balls packed with sawdust, there being fifty in the 3-pounder and eighty in the 6-pounder.

The Felt Wad.—All cartridges have a felt wad inserted between the base of the shell and the top surface of the powder.

GUN EXERCISE.

The Crew.—A gun's crew consists of four men, all of whom should be thoroughly trained rifle shots. They are numbered 1, 2, 3, and 4.

Stations.—The stations of the crew when the gun is secured are: For guns mounted on deck: in line, near the rail, abreast the gun, facing inboard, No. 1 on the right; for guns mounted aloft: on the upper deck, as before, abreast the mast; for guns mounted in boats: at the rear of the gun in boats with steam, or as bow oarsmen in pulling boats.

Arms.—The arms of the crew when aboard ship are rifles; when in boats, such additional arms as may be prescribed for the special service.

(*Order*) "CAST LOOSE AND PROVIDE."

No. 1 casts adrift gun lashings, removes gun cover, ship's gun stock, removes the drill hook and hooks up the spring, tests the mechanism, examines the bore and the pivoting, puts on his equipments, and takes his fighting station in rear of and facing the gun. If the gun is mounted aloft, he first goes aloft and sends down the tackle for hoisting up ammunition.

No. 2 procures and examines the accessory chest, rifles and equipments, puts the rifles in the ready racks. After this duty is performed he puts on his equipments, and takes his fighting station at the right side of the breech, and facing it.

No. 3 goes to the ammunition hatchway to assist No. 4 in bringing ammunition. After this duty is performed he puts on his equipments, and takes his fighting station at the left side of the breech, and facing it.

Digitized by Google

No. 4 goes to the ammunition hatchway to assist No. 3 in bringing ammunition. After this duty is performed he puts on his equipments, and takes his fighting station abreast the gun, and amidships, the ammunition being beside him.

Special.—If the gun is mounted aloft, Nos. 3 and 4 do not go aloft until they have whipped up all the articles required.

The first supply of ammunition brought to the gun will be about 40 rounds for deck and boat service, and 60 rounds for service aloft or special boat service.

In preparing boats for service, No. 1 will superintend mounting the gun in the boat; Nos. 2, 3 and 4 will procure the ammunition, arms and equipments for the gun's crew.

(*Order*) "READY."

No. 1 places his shoulder to the stock, left hand at the handle, right hand at the pistol grip, feet planted firmly to meet the motion of the ship.

No. 2 grasps the breech block levers ready for opening the breech.

No. 3 receives a cartridge from No. 4, and holds it horizontally and easily, projectile in the left hand, cartridge head in the right.

No. 4 opens the ammunition box, passes a cartridge to No. 3, and takes out a second cartridge ready for passing.

(*Order*) "LOAD."

No. 2 throws the breech block lever smartly back, opening the breech. As soon as No. 3 has inserted the charge, he throws the breech block lever smartly up, closing the breech.

No. 1 carries his right hand to the sight pinion and sets the sight.

No. 3, as soon as the breech is open, points the shell fairly, and then enters it smartly in the gun, pushing it until the cartridge head takes against the extractor. *Keeping the fingers of the right hand* (wrist up) *pressing against the cartridge head*, he gives the order to No. 2, "Right," who then closes the breech.

Special.—In inserting the cartridge, No. 3 will be very careful not to drive the point of the shell against the edge of the chamber. This will not happen if it is pointed horizontally from behind the breech; but is very liable if the awkward movement is attempted of pointing down from over the gun.

No. 4 passes a fresh cartridge as required.

Digitized by Google

(*Order*) "AIM."

Naming the object, direction, and range.

No. 1 raises the sight for the range, then sets the sliding leaf for drift, if necessary; seizes the pistol grip, finger on the trigger, and aims. When on with the object he fires without order, unless otherwise specially directed.

(*Order*) "UNLOAD."

No. 2 grasps the breech block lever and draws it back easily. When the cartridge has been removed he closes the breech.

No. 1 *pulls the trigger.*

No. 3 holds his right hand in the breech opening, catches the cartridge as it comes out, removes it, and passes it to No. 4.

No. 4 returns all ammunition to the box, and when all is in closes the box.

(*Order*) "SECURE."

No. 1 takes off his equipments, secures the gun, and takes his station in line.

No. 2 takes off his equipments, returns the accessory chest, the rifles and equipments, and takes his station in line.

No. 3 takes off his equipments, then assists No. 4 in returning the ammunition, and takes his station in line.

No. 4 takes off his equipments, and assists No. 3 in returning the ammunition.

Special.—If the gun is aloft, Nos. 3 and 4 go down immediately to receive the articles on deck. Nos. 1 and 2 sling and lower all the articles, and then No. 2 goes down to assist No. 3 in returning them.

In discharging boats, No. 1 superintends taking out the gun. Nos. 2, 3, and 4 discharge the articles.

Cautions.—In securing the gun, except where there is a possibility of an attack, the drill hook will invariably be mounted.

In returning ammunition, great care must be taken that empty cartridge cases are not put in ammunition boxes containing loaded cartridges or *vice versâ*. No. 4 is held responsible for this point.

After ammunition boxes have been sent below, and before stowing them in the shell rooms, the shell room men will redistribute the

Digitized by Google

ammunition so as to fill all partly filled boxes but one completely. This last partly filled box should never be sent up on deck in supplying.

Accidents.—When fire is once opened, it is necessary, in order to maintain it, first, to guard against causing an accident; second, to repair the damage at once.

Jammed Cartridge.—If in loading a cartridge jams and will not let the breech block close, *never attempt to drive it home by forcing the block;* unload at once, put the cartridge aside and try another.

Non-extraction.—If for any reason the cartridge case or cartridge will not extract, catch the head with the extracting tool and pull it out. If this fails, ram it out from the muzzle.

Broken Extractor.—If the nib of the extractor breaks, back the keep bolt clear of the breech block, lower the block until the extractor slot is clear, pull out the extractor and insert the spare one. *Do not insert the spare extractor with a cartridge already in the gun*, as the hook will come on the wrong side of the cartridge head.

Broken Mechanism.—If a firing pin, main or sear spring breaks, take out the broken part and put in the spare one.

Missfires.—If a cartridge misses fire, unload it at once and see that the drill hook has been removed. Load a second cartridge, and try again. If the missfire is repeated, remove the breech block at once and feel the firing pin to see if it is broken. If it is not, and everything looks right, change the main spring before putting the block back.

These precautions may not be necessary, but it must be remembered that when under fire no time must be lost in examining cartridges or mechanism; a remedy must be applied at once.

Chamber Disfigured.—If after firing, the cartridge case sticks after partial extraction, feel for a burr about the edge of the chamber; careless loading may cause the hard point of the shell to knock up a burr just sufficient to clinch the case on firing. If such exists it must be filed off smooth.

In action, do not try a second time any cartridge that has once failed unless it is absolutely necessary. To do so is an unnecessary experiment by which a telling shot may be missed.

Digitized by Google

Care and Cleaning Stations.—The gun's crew should be responsible for the condition of the gun under the circumstances. No. 1 is specially charged with the gun body and sights; No. 2 with the breech block and mechanism; No. 3 with the mounts; No. 4 with spare articles and equipments.

Special Aiming Directions.—Aim with a full sight. An aim with a fine sight gives a range about 100 yards less than that for which the sight is set.

No correction on the sliding leaf is necessary for drift of projectile. The sight is compensated for this up to 3000 yards.

The graduations on the sliding leaf are in millimetres, and the leaf is used for wind and speed allowances as follows:

Range, 1000 yards. For a light breeze (force 2) allow 1 millimetre; for a strong breeze (force 6) allow 6 millimetres. Make proportional allowances for other ranges and strength of wind. Move the sight notch *towards the wind.*

Range, 1000 yards. Speed of target, 10 knots; allow 6 millimetres. Make proportional allowances for other speeds and ranges. Move the sight notch towards the direction in which the target is moving.

Range, 1000 yards. Speed of gun, 10 knots; allow 6 millimetres. Make proportional allowances for other speeds and ranges. Move the sight notch aft.

In correcting the aim for wide shots, at 1000 yards allow 1 millimetre for every 5 yards. Move the sight notch in the direction that it is desired to send the shell.

In preparing to repel a torpedo-boat attack, or under circumstances where an onset requires quick fire, set the sight *permanently* at 750 yards, with the sliding leaf centered.

Always aim directly at the object. Never compensate by a wide aim as long as there is time to adjust the sight.

TORPEDO-BOAT AND GUARD-BOAT GUN.

Plate XVI.

Nomenclature.

Exterior.—(1) Fore sight ring; (2) chase; (3) cap square bolts; (4) trunnion ring; (5) trunnions; (6) breech; (7) breech block; (8) rear sight; (9) stock; (10) pistol grip; (11) crank handle.

Digitized by Google

RAPID FIRING TORPEDO AND GUARD BOAT GUN.

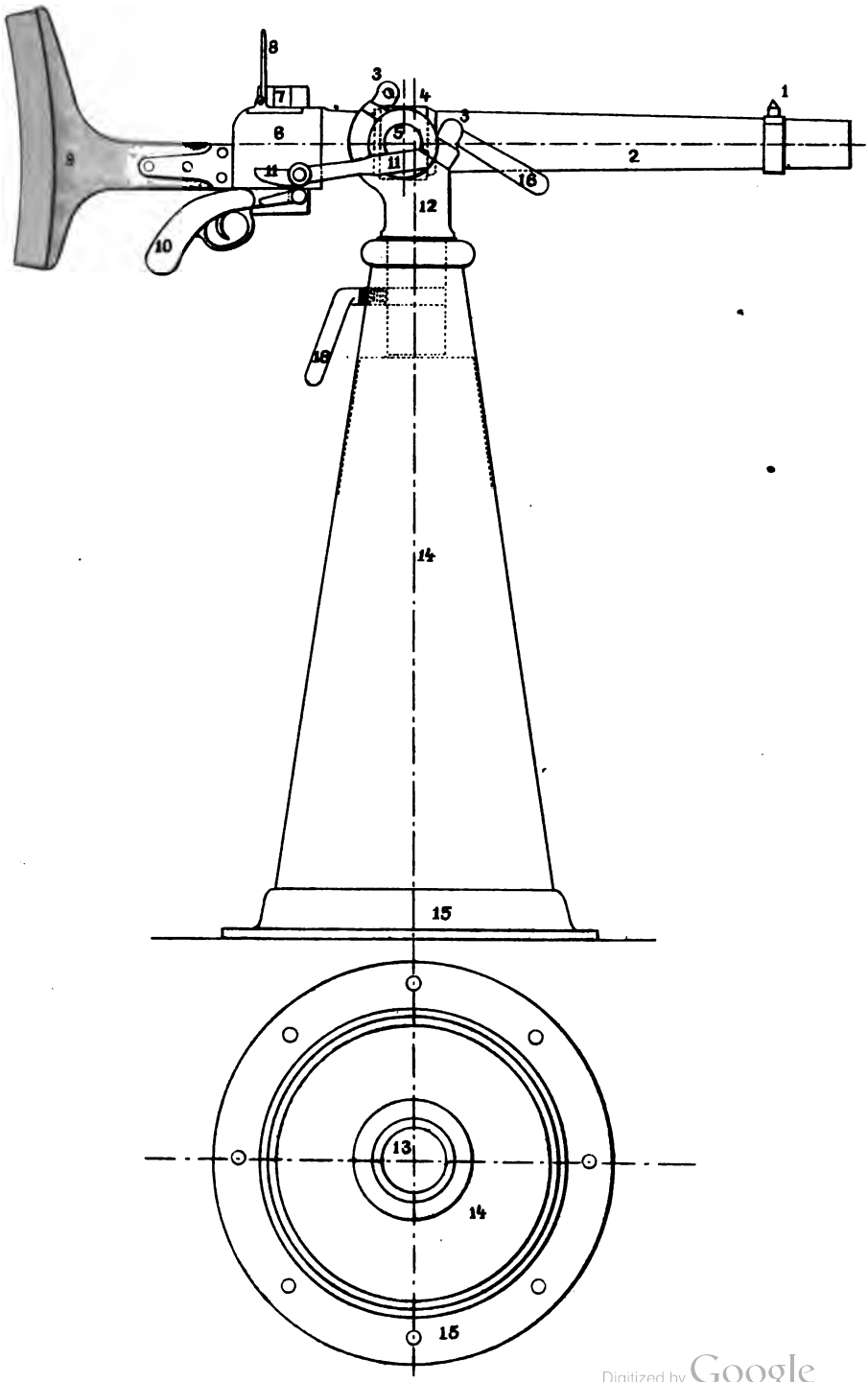

Digitized by Google

Digitized by Google

Interior.—The nomenclature is the same as that for the 3-pounder and 6-pounder.

Mount.—(12) Pivot; (13) socket; (14) pedestal; (15) base ring; (16) pivot clamp.

Ammunition.—The nomenclature is the same as that for the 3-pounder and 6-pounder.

Description.

The Gun.—The 1-pounder torpedo-boat and guard-boat gun is made of a single block of steel, having a trunnion ring screwed on the body in a position to give no preponderance, and a light ring well forward on the chase to form a seat for the fore sight.

The Breech and Mechanism is similar to that of the 3-pounder and 6-pounder guns, the parts only differing in the following particulars:

The Crank has but one handle.

The Rear Sight is a folding leaf with points and notches for regular divisions of range.

The Stock has no handles.
There is no drill hook.

The Ammunition is the same as that provided for the 1-pounder 37 mm. revolving cannon.

The Mount is a single pillar standard arranged to suit special positions of mounting, such as in the tops, on the conning towers of torpedo boats, in the bow and stern sheets of light boats, etc.

The top and guard-boat mount (Plate XVI) consists of a gun-metal socket, supported by a light sheet-steel cone. To the base of the cone or pedestal is riveted a gun-metal base ring, through which pass the holding down bolts for securing it to the platform. The pivot is of gun-metal, and similar to that on the 3-pounder and 6-pounder non-recoil mounts. When required, segmental holding down rings are provided, so that the gun and mount complete may be readily and quickly transferred from their position on deck to the boat's tops or other positions.

Gun Exercise.

Crew.—A gun's crew consists of two men at most, who should be thoroughly trained rifle shots. They are numbered 1 and 2.

Digitized by Google

The Stations of the crew are: No. 1, at the rear of the breech facing the muzzle; No. 2, at the left side of the breech facing it.

The Arms of the crew are rifles, together with such other arms as may be prescribed for the special service.

(*Order*) "CAST LOOSE AND PROVIDE."

No. 1 casts adrift the gun and inspects it.

No. 2 provides the ammunition, placing it within easy reach. If not already armed, No. 2 provides the arms.

If the gun is mounted aloft, No. 1 goes aloft and receives the supplies; No. 2 procures and hoists up the supplies.

In preparing boats for service, No. 1 superintends embarking the gun; No. 2 provides the ammunition and supplies.

(*Order*) "READY."

No. 1 places his shoulder to the stock, steadying it if necessary with the left hand; right hand at the breech block lever; feet planted firmly to meet the motion of the boat.

No. 2 takes a projectile from the box or stand and holds it ready for loading.

With one man at the gun alone, he handles the ammunition with the left hand, loads and fires with the right.

(*Order*) "LOAD."

No. 1 opens the breech.

No. 2 inserts the cartridge, pressing it up against the extractor with the finger of the right hand. No. 1 closes the breech and carries his right hand to the pistol grip. No. 2 takes a fresh cartridge ready for reloading.

(*Order*) "AIM."

Naming the object, direction, and range.

No. 1 aims, and when on with the object he fires without order, unless otherwise specially directed.

(*Order*) "UNLOAD."

No. 1 opens the breech easily.

No. 2 catches the cartridge as it comes out and returns it to the box. No. 1 closes the breech *and pulls the trigger.*

Digitized by Google

(*Order*) "SECURE."

No. 1 secures the gun.

No. 2 replaces the ammunition and arms.

Accidents.—The same precautions and steps are to be taken to guard against or rectify accidents as are prescribed for the 3-pounder and 6-pounder.

Cleaning Stations.—No. 1 cleans and cares for the gun and mechanism. No. 2 cleans and cares for the mount and supply-box articles.

Digitized by Google

FIRING TABLE.

1-Pounder.

Weight of shell, 1 lb. Weight of charge, 2.8 oz.
Initial velocity, 1319 feet.

Range.	Elevation.	Drift.	Remaining Velocity.	Angle of Fall.	Time of Flight.	Mean Deviation.		
						Range.	Direction.	Height.
Yds.	Deg. Min.	Yds.	Ft.	Deg. Min.	Sec.	Yds.	Yds.	Yds.
100	0 06	0.01	1234	0 11	0.2	22.3	0.06	0.07
200	0 17	0.04	1161	0 24	0.4	21.3	0.12	0.14
300	0 29	0.09	1091	0 38	0.6	20.5	0.19	0.22
400	0 42	0.16	1037	0 52	1.0	19.8	0.25	0.30
500	0 56	0.27	987	1 09	1.3	19.1	0.32	0.39
600	1 10	0.43	944	1 28	1.7	18.5	0.42	0.49
700	1 25	0.64	906	1 49	2.0	18.0	0.50	0.57
800	1 42	0.87	874	2 12	2.4	17.5	0.55	0.65
900	1 59	1.2	843	2 37	2.7	17.1	0.63	0.79
1000	2 16	1.6	819	3 05	3.1	16.7	0.70	0.90
1100	2 35	2.0	796	3 35	3.4	16.5	0.79	1.02
1200	2 55	2.5	775	4 07	3.8	16.3	0.89	1.1
1300	3 16	3.2	756	4 42	4.2	16.0	0.99	1.3
1400	3 38	3.9	741	5 20	4.5	16.0	1.05	1.4
1500	4 00	4.7	726	5 59	4.9	15.9	1.1	1.5
1600	4 24	5.7	711	6 30	5.4	15.9	1.3	1.7
1700	4 49	6.7	695	7 13	5.8	15.9	1.4	1.9
1800	5 15	7.9	682	7 56	6.2	15.9	1.6	2.1
1900	5 42	9.4	670	8 31	6.7	16.1	1.6	2.4
2000	6 10	11.0	659	9 14	7.1	16.5	1.7	2.7
2100	6 39	12.7	650	10 00	7.6	16.9	1.8	3.0
2200	7 09	14.7	641	10 48	8.0	17.2	2.0	3.3
2300	7 40	16.8	632	11 39	8.5	17.6	2.2	3.6
2400	8 12	19.3	623	12 31	9.0	18.1	2.4	4.0
2500	8 46	22.0	613	13 24	9.5	18.7	2.5	4.6

Digitized by Google

PENETRATION TABLE.

1-POUNDER.

Kind of Target.		Thickness.	Angle of Target.	Range for complete penetration.	Remarks.
Steel plates.	Thorneycroft. Torpedo boat.	$\frac{1}{4}$ in.	0°	3280	The shell bursts in piercing plates of $\frac{1}{4}$ inch and $\frac{9}{16}$ inch, and oak timbers of 4 inch and $11\frac{3}{4}$ inch, scattering its fragments behind the target.
			20°	3060	
			30°	2620	
	Unarmored parts of iron-clads.....	$\frac{9}{16}$ in.	0°	550	
			20°	440	
			30°	275	
		1 in.	0°	At the Muzzle.	From 0 to 1100 yards the same shell fired against a plank of 1 inch bursts close behind it.
		$\frac{7}{8}$ in.	20°		
		$\frac{13}{16}$ in.	30°		
Oak timbers.....		4 in.	0°	4375	From 0 to 1100 yards fired on water it explodes at the first or second point of impact.
			30°	4155	
		$11\frac{3}{4}$ in.	0°	875	
			30°	450	
		18 in.	0°		
		$15\frac{3}{4}$ in.	30°		

Thickness of oak necessary to stop a shell at the muzzle, $27\frac{1}{2}$ inch.
Penetration of shell into oak of greater thickness than $27\frac{1}{2}$ in., $20\frac{3}{4}$ in.

Against the broadside of the first class (100 feet) torpedo boats, the shell pierces the sides, bunker of coal, and boiler at 200 yards.

Against the bow of the same boat, the shell pierces the bow and four transverse bulkheads.

Digitized by Google

FIRING TABLE.

3-Pounder.

Charge, 1.71 lbs. Shell, 3.28 lbs. Initial Velocity, 2002 feet.

Range.	Inclination.	Drift.	Sight Marks.	Drift Marks.	Time of Flight.	Remaining Velocity.	Mean Deviation.	
							Range.	Direction.
Yds.	Deg. Min.	In.	In.	In.	Sec.	Ft.	Yds.	Yds
100	0 10	.05	.083	.016	.2	1926	16.2	.02
200	0 14	.12	.116	.017	.4	1857	15.6	.04
300	0 19	.19	.149	.018	.6	1788	15.2	.07
400	0 23	.26	.190	.018	.7	1719	14.8	.10
500	0 28	.33	.231	.019	.9	1650	14.4	.13
600	0 34	.41	.281	.019	1.1	1581	14.0	.16
700	0 40	.49	.331	.020	1.3	1529	13.6	.19
800	0 46	.57	.381	.021	1.5	1473	13.2	.23
900	0 52	.65	.431	.022	1.7	1417	12.8	.27
1000	0 59	.74	.488	.023	1.9	1361	12.4	.32
1200	1 14	.95	.610	.024	2.4	1257	11.8	.44
1400	1 30	1.17	.744	.026	2.9	1168	11.4	.56
1600	1 48	1.42	.892	.027	3.4	1092	11.1	.69
1800	2 07	1.69	1.056	.028	4.0	1033	10.9	.86
2000	2 28	1.97	1.224	.030	4.5	991	10.7	1.06
2200	2 50	2.27	1.406	.031	5.0	955	10.5	1.31
2400	3 15	2.59	1.613	.032	5.6	922	10.5	1.54
2600	3 41	2.94	1.829	.034	6.2	896	10.5	1.81
2800	4 09	3.35	2.061	.035	6.9	869	10.6	2.12
3000	4 39	3.75	2.310	.037	7.6	843	10.7	2.51
3200	5 11	4.19	2.577	.039	8.3	820	10.9	2.84
3400	5 45	4.67	2.859	.040	8.9	800	11.3	3.28
3600	6 21	5.17	3.161	.042	9.7	777	11.9	3.83
3800	6 59	5.66	3.479	.044	10.5	758	12.6	4.37
4000	7 40	6.18	3.824	.046	11.2	738	13.2	4.92
4200	8 23	6.76	4.186	.048	12.1	722	14.0	5.69
4400	9 07	7.35	4.558	.050	12.9	702	15.0	6.34

Digitized by Google

PENETRATION TABLE.

3-POUNDER.

								YARDS.
Oak.	Thickness	$11\frac{3}{4}$	inches.			Complete penetration	at	4375
	"	$15\frac{3}{4}$	"			" "	"	3850
	"	$19\frac{1}{2}$	"			" "	"	3450
Iron.	Thickness	$2\frac{3}{8}$	inches.	Angle	0°	Complete penetration	at	1200
	"	"	"	"	75°	" "	"	1050
	"	$3\frac{1}{8}$	"	"	0°	" "	"	600
	"	"	"	"	75°	" "	"	400
Steel.	Thickness	$\frac{5}{8}$	inch.			Complete penetration	at	5000
	"	$2\frac{3}{8}$	"			" "	"	600
	"	4	"			" "	at muzzle	

The steel shell pierces the unarmored sides of all war vessels at 2250 yards.

Against the bow of a first class torpedo boat, end on, the steel shell at 800 yards will pierce the bow, explode, and send its fragments through six transverse bulkheads and the end of the boiler.

Against the broadside of the same boat at 1500 yards the same shell will pierce the side, bunker of coal, and boiler.

Digitized by Google

FIRING TABLE.

6-Pounder.

Charge, 1 lb. 15½ oz. French C 2. Shell, 6 lbs. Initial Velocity, 1820 ft.
Permanent Inclination of Tangent Sight, 2 deg.
Length of Line of Sight, 37.16 in. No allowance for Jump Angle.*

Range.	Elevation.	Drift.	Remaining Velocity.	Angle of Fall.	Time of Flight.	Mean Deviation.		
						Range	Direct.	Height.
Yds.	Deg. Min	Yards.	Feet.	Deg. Min.	Sec.	Yds.	Yds.	Yds.
100	0 05	0.00	1762	0 05	0.1	20	0.17	0.04
200	0 10	Right. 0.01	1708	0 11	0.3	19	0.17	0.08
300	0 15	" 0.02	1655	0 18	0.4	19	0.18	0.10
400	0 21	" 0.03	1603	0 25	0.6	19	0.18	0.13
500	0 27	" 0.05	1552	0 32	0.8	18	0.18	0.18
600	0 34	" 0.07	1503	0 40	1.0	18	0.24	0.22
700	0 41	" 0.10	1454	0 49	1.2	18	0.29	0.25
800	0 48	" 0.13	1407	0 58	1.4	18	0.29	0.31
900	0 56	" 0.16	1352	1 08	1.6	18	0.35	0.35
1000	1 04	" 0.19	1319	1 19	1.9	17	0.35	0.37
1200	1 22	" 0.25	1240	1 43	2.4	17	0.41	0.51
1400	1 41	" 0.3	1168	2 11	2.9	16	0.53	0.65
1600	2 01	" 0.3	1105	2 44	3.5	16	0.65	0.81
1800	2 23	" 0.4	1050	3 21	4.1	16	0.77	0.99
2000	2 46	" 0.3	1012	4 02	4.7	16	0.89	1.18
2200	3 10	" 0.2	979	4 46	5.3	16	1.06	1.40
2400	3 36	" 0.2	949	5 33	5.9	17	1.24	1.64
2600	4 02	" 0.0	921	6 22	6.5	17	1.42	1.94
2800	4 30	Left. 0.3	894	7 13	7.1	18	1.60	2.19
3000	4 58	" 0.6	868	8 07	7.8	18	1.77	2.54
3200	5 28	" 1.1	844	9 05	8.5	18	1.95	2.96
3400	6 00	" 1.8	821	10 11	9.3	18	2.19	3.37
3600	6 35	" 2.7	799	11 26	10.1	19	2.43	3.72
3800	7 12	" 3.7	777	12 50	10.8	19	2.72	4.31
4000	7 53	" 5.2	756	14 19	11.6	19	2.96	4.91
4200	8 37	" 7.1	736	15 54	12.4	20	3.19	5.67
4400	9 24	" 9.3	717	17 31	13.2	20	3.55	7.10

* See the following page.

Digitized by Google

The drift in the table is the remaining or actual drift; the permanent angle of deflection of the tangent sight being so determined as to give the most satisfactory compensation within fighting ranges

The columns of mean deviation are so computed from the results of firing-ground tests that any shot that should give a deviation greater than three times the tabulated amount must be considered as abnormal. To find the space within which the best half of any number of shots will fall, multiply the space represented by the tabulated dimensions by 1.69. To find the space within which 98 per cent of any number of shots will fall (2 per cent being allowed for abnormal shots), multiply the space represented by the tabulated dimensions by 6.

The firing-ground tests at Shoeburyness, Eng., for establishing a range table having found a negative jump angle of 4 minutes, whilst those at Annapolis, U. S., for the same purpose, found a positive jump angle of 2 minutes, it has been considered that differences in solidity of mount and of clamping probably led to the different results, the gun itself having no positive tendency one way or the other. In the table, therefore, jump is omitted.

Digitized by Google

TABLES OF WEIGHTS AND MEASUREMENTS.

GUNS.

		3-Pounder.	6-Pounder.	1-Pounder.
Diameter of bore between lands, . .	in.	1.85	2.24	1.46
" " " grooves, .	"	1.88	2.27	1.49
Equivalent diam. of cross section, . .	"	1.87	2.26	1.48
Maximum " powder chamber,	"	2.28	2.71	1.57
Length of bore in calibres, ...		40	40	20
Distance from bottom of bore to base of shell, ...	in.	13.46	10.07	3.66
Total length of gun, ...	"	80.63	97.64	33.15
Extreme length, including stock, . .	"	100.40	120.08	44.96
Length of rifled bore, ...	"	58 47	76.89	24.68
Number of grooves, ...		20	24	12
Angle of rifling, ...	deg	5.40	1 to 6	6
Diameter of trunnions, ...	in.	2.75	3 35	1.77
Distance between rim bases, . . .	"	6.69	9.25	3.94
Axis of trunnions from face of breech,	"	23.23	24.80	9.13
Length of line of sight, ...	"	37.48	37.16	27.56
Line of sight from Axis of bore } horizontal distance, .	"	2.68	3.94	1.87
Line of sight from Axis of bore } vertical distance, . .	"	3.94	4.92	2.36
Weight of breech block, ...	lbs.	39	59	9
Weight of stock, ...	"	26	28	7
Total weight of gun, ...	"	506	800	73

Digitized by Google

TABLES OF WEIGHTS AND MEASUREMENTS.

AMMUNITION.

			3-Pounder.	6-Pounder.	1-Pounder.
Steel Shell.	Length,	in.	6.77	8.66	3.74
	Radius of ogive in diameters,		2	3	2
	Ratio of weight to spherical shot,		3.83	4	2.78
	Weight empty,	lbs.	3.04	5.6	0.99
	Weight of bursting charge,	oz.	2.1	4	0.5
	Weight of fuze,	"	2.03	2.03	1.4
	Complete loaded weight,	lbs.	3.3	6	1.1
Common Shell.	Length,	in.	6.49	8.46	3.66
	Radius of ogive in diameters,		2.5	2.5	2.17
	Ratio of weight to spherical shot,		3.83	4	2.5
	Weight empty,	lbs.	3.12	5.67	0.9
	Weight of bursting charge,	oz.	2.1	3	0.77
	Weight of fuze,	"	2.01	2.03	0.7
	Complete loaded weight,	lbs.	3.3	6	1
Case Shot.	Weight,	"	3.63	6.5	1.25
	Number of bullets,		50	80	28
	Weight of each bullet,	oz.	1	1	0.7
Diameter of rifling belt,		in.	1.93	2.29	1.49
Weight of empty cartridge case,		oz.	16	43	3
Weight of powder charge (shell),		lbs.	1.71	1.95	2.8
" " " (case shot),		"	1.54	1.76	2.8
" entire cartridge (steel shell),		"	6.05	9.23	1.5
" " " (common shell),		"	6.05	9.23	1.4
" " " (case shot),		"	6.2	9.55	1.5
Total length of complete cartridge,		in.	20.27	18.78	6.57

Digitized by Google

TABLES OF WEIGHTS AND MEASUREMENTS.

Mounts and Accessories.

		3-Pounder.	6-Pounder.	1-Pounder.
Weight of pivot for fixed stand,	lbs.	150	242	40
Weight of socket for rail mount,		...	...	48
Weight of fixed stand,	"	651	832	122
Total weight of gun and mount (without shield),	"	1307	1877	235
Weight of shield,	"	297	348	...
Weight of recoil carriage (without shield),	"	556	579	...
Weight of shield,	"	93	93	...
Weight of accessories for mount,	"	51	58	...
Mean height of trunnions above deck,	ft.	4·43	4·43	4·43
Weight of chest with spare parts,	lbs.	24	30	17
Landing mount. Weight of carriage complete,	"	440	550	356
Landing mount. Weight of limber empty,	"	594	605	352
Landing mount. Weight of limber loaded,	"	1030	1069	638
Landing mount. Number of rounds in limber,		72	50	192
Landing mount. Diameter of wheels,	in.	45.2	45.2	37.4
Landing mount. Track of wheels,	"	47.2	47.2	33.5
Total weight of landing outfit,	lbs.	1975	2422	1067
Extreme elevation and depression,	deg.	— 20 + 15	— 20 + 15	— 35 + 25
Weight of loaded ammunition box,	lbs.	128	128	108
Number of rounds in box,		16	11	60

Digitized by Google

CHAPTER IV.

MACHINE GUNS.

Machine guns also form a part of the secondary batteries of U. S. ships of war, and are mounted at convenient points commanding as great an arc of train as possible. Some are mounted in the fighting tops which are now fitted to all modern ships.

Definition.—A *machine gun* may be defined as consisting of any number of breech-loading rifled barrels grouped about an axis, or arranged in a horizontal line, which are loaded and fired in continuous succession, or by volley, by the action of suitable machinery at the breech, the power applied by crank and gearing, or by levers, and using fixed ammunition, the empty cartridge shells being automatically ejected. There are numerous types in use in various countries; among them may be named the Gatling, Nordenfeldt, Hotchkiss revolver cannon, Lowell battery gun, and Gardner gun. The Gatling, Lowell battery gun, Nordenfeldt and Gardner guns use small-arm ammunition, while the Hotchkiss and the Nordenfeldt torpedo guns use projectiles of ½ pound weight and upwards.

Use of Machine Guns.—The machine guns using small-arm ammunition are generally used in naval actions in ship's tops against exposed gun's crews or bodies of men either on opposing ships or in fortifications on shore. They may be used with great effect against boarders, should that method of attack be resorted to, or in clearing the way for boarders. It seems little probable, however, that boarding will ever be attempted in the future, since the introduction and general use of magazine breech-loading firearms and the use of machine guns render such attempts extremely unlikely of success. In recent wars the Gatling and Nordenfeldt machine guns using small-arm ammunition have been used with good effect in driving exposed crews from guns on upper decks (war between Chili and Peru), and from barbette guns or fortifications (English at Alexandria). When landed for use on shore it becomes an effective weapon against exposed troops or against mobs, but its usefulness is confined to the range of small arms.

Digitized by Google

Defense against Torpedo Boats.—With the introduction of the swift torpedo boats it became necessary to provide a means of defense, and a weapon had to be devised having sufficient penetrative power to pierce the plates and boilers of a torpedo boat at a distance of 500 yards. Other essential conditions required were that the gun could be fired so rapidly that it would almost certainly score a sufficient number of hits, on an approaching torpedo boat, to insure its being disabled during its run at ıull speed from the distance above named, before it could reach the vessel attacked, or which could be fired so rapidly as to make it impossible for the boat to discharge a torpedo of the Whitehead type at such a range that the missile would have any reasonable chance of hitting its mark. Two guns were invented, the Hotchkiss revolver cannon and the Nordenfeldt gun, which seemed to fulfill the conditions fairly well. Recent improvements in torpedo boats, notably their increase in size and speed, means of defense, and apparatus for firing torpedoes, have led to improvements in the guns, principally in calibre and penetrative power, together with the use of electric search lights at night; but it is perhaps an open question whether a ship can generally be successfully defended against the attack of torpedo vessels by the use of machine guns alone. It must be admitted, however, that they are a most valuable addition to the armament of ships of war, and are, in fact, indispensable. This fact has been recognized in the armaments designed for modern ships, which carry not less than four each, while the new French ironclads of the first class are designed to carry no less than 20 of these destructive engines of warfare. The Hotchkiss and Nordenfeldt guns have the range of boat artillery, and can be used against unarmored ships with destructive effect. Recent experiments with steel projectiles, fired from small arms of high power with powder chambers and progressive powders, give promise of grand results in the penetration of wrought-iron or untempered steel plates. And as the principle will doubtless be utilized by the makers of machine guns, the efficiency of the guns against ships thinly plated, gun shields, and torpedo boats whose boilers are protected by transverse bulkheads, will be vastly increased. The larger classes of torpedo boats are now armed with a machine gun, either for defense against the enemy's torpedo boats, or for firing at the electric search light on an enemy's vessel before beginning a night attack with torpedoes.

Digitized by Google

The Gatling Gun may be described in general terms as consisting usually of ten breech-loading rifle barrels, grouped about an axis, and having ten corresponding locks; in working the gun, the power being applied by a crank, the barrels and locks revolve together, but irrespective of this motion the locks have a forward and backward motion of their own. The forward motion places the cartridges in the chambers of the barrels, and closes the breech at the time of each discharge, while the backward motion extracts the empty cartridge cases after firing. The gun is loaded and fired only when the barrels are in motion from left to right; that is, while the handle, or crank, is working forward. When the gun is in action there are always five cartridges going through the process of loading, and five cartridge cases in different stages of being extracted, and these several operations are continuous while the gun is being worked. Thus, as long as the gun is fed with cartridges, the several operations of loading, firing, and extracting are carried on automatically, uniformly and continuously. The earlier model Gatling guns had cartridges fed to them by means of feed cases or drums, but recently a new method for supplying the cartridges to the gun has been devised which is *positive* and certain in its action, in which the mechanism never loses control of the cartridges from the time they leave the feed magazine until they enter the chambers, are loaded, fired, and the empty cases extracted.

This new improvement not only increases the rapidity and certainty of fire, but also enables the gun to be fired at a possible rate of 1200 shots per minute, and at all degrees of elevation or depression. The new model is provided with two axles for shipping the crank, one at the side as in the older model, and the other is an extension of the main shaft through the breech; one turn of the former delivers 6 shots, one turn of the latter delivering 10 shots. The bullets can thus be made to fall by high angle fire upon men protected by breastworks or gun shields at a distance of 500 yards from the gun and upward. It has been shown by experiment also that the bullets fired at high angles strike point first, do not cease their rotation during flight, and have sufficient penetrative power to pierce from two to three inches of timber.

At 500 yards range the gun was elevated 85°.
At 1000 yards range the gun was elevated 77°.
At 2000 yards range the gun was elevated 66°.
At 2500 yards range the gun was elevated 56°.
At 3000 yards range the gun was elevated 24° 40′.

Digitized by Google

General Notes on the Gatling System and on its Effective Employment in Naval Operations.*—" In the consideration of the characteristics of the Gatling, and their adaptability for naval purposes, we may safely hold that it possesses certain features, among which we may name rapidity of fire and endurance, which are peculiar to the system alone, and without which there is great loss in effectiveness. In the employment of the Gatling on board ship, on the poop deck or forecastle, in the tops, or the bows of the steam launch, it is believed that the ordinary tripod would form a very convenient carriage. In this case the legs should be provided with footcalks shipping in sockets placed for that purpose in the planking. A small strap, from an eye bolt above, to another in the deck midway between the sockets, set taut by a short heaver would secure a piece against sea-way accidents.

To cover a landing party, or protect the flanks of a boat expedition, when quick movement is essential, it will be found desirable to mount the Gatling in the bows of the steam cutter or launch. There would also probably be better facilities for manipulating and mounting the piece than obtain in others of our service boats. The officer placed in charge of the piece on board ship should first adjust the thrust of the locks to the thickness of head of the ammunition supplied on board. The indentation produced by the firing pin and the " feel " of the crank will guide him in this matter. A normal mark is placed on the adjusting nut, but this cannot be absolute.

After a prolonged fire, with a prospect of a continuance, the nut should be eased a notch or two to compensate for the new conditions caused by expansion of parts.

After a continuous use of the piece the barrels are rapidly cooled by pointing head to wind, with lock, port and hopper thrown open.

A disabled lock need not interrupt the fire ; if there is not sufficient time to effect an exchange it should be withdrawn, and there is but the loss of fire from the corresponding barrel.

Several members of the gun's crew should be made expert in changing a lock or extractor.

To deliver an effective volley at a given instant, the crank should be turned until the first cartridge of the feed case enters the chamber, or until one cartridge is fired. There is then no loss of time, as the object to be fired at comes within range. This also tends to secure a safe delivery of fire, eliminating the difficulty of the first cartridge.

* Paper by Lieut. Com. Folger, U. S. N.

Digitized by Google

At the beginning and end of the feed case, turn the crank slowly.

It will be found effective to stand on the trail of the field carriage when great accuracy is desired at long ranges. The effective range of the new model gun is about 2000 yards. The elevation will be about 25°, and a penetration of over an inch may be anticipated, which will be sufficient to disable a man.

In case circumstances should render it advisable to desert a Gatling gun, the crank should be removed and carried away; and the piece may be effectually disabled by a severe blow on the rear end of the main shaft, or at the point of junction of the casing and face plate.

The crew of a machine gun should be young, active men, seamen or ordinary seamen, if possible. They should not have other fighting duties, and should be exercised frequently. Dummy cartridges are supplied for use in drill."

The Hotchkiss Revolver Cannon.—The system of this gun may be explained as follows: Five barrels grouped around a common axis are revolved in front of a solid breech block, which has in one part an opening to introduce the cartridges and another opening through which to extract the empty shells, the cartridges being fired after being revolved and while motionless in front of the solid portion of the breech. The exterior aspect of this revolver cannon resembles the Gatling gun; it being, on the other hand, entirely different in its interior mechanism. The system is composed of two distinct parts, viz. the barrels with their disks and shaft, and the frame and breech containing the mechanism.

The five Barrels, made of the finest oil-tempered steel, are mounted around a common axis between two disks, on a central shaft. The series of barrels are in this way placed in a rectangular frame, which is attached to the breech, the rear end of the shaft penetrating the same to receive the rotary motion from the driving gear.

The Breech itself is composed of a solid cast-iron breech block, which absorbs the greater part of the recoil. It has a door at the rear end, which can be opened so that the mechanism can be easily examined, and can, if necessary, be dismounted and put back into its place without the use of any special tools.

A peculiar feature of this gun consists in the barrels remaining *still* during the discharge, so that there is no movement of any kind to impede the accuracy of fire. This stop or lost motion is obtained by the shape of the driving worm, which is so constructed that the

Digitized by Google

inclined driving thread only covers half its circumference, the other half of the thread being straight.

The effect of this is, that the barrels only revolve during a half revolution of the worm and stand still during the other half revolution. The combination of mechanism is so arranged that the loading, firing, and extracting take place during this pause. This feature is of great importance for the accuracy of fire and durability of the system.

The Worm Shaft projects through the breech on the right side, and has a crank, by which the whole system is moved; on the left side of the worm shaft a small crank is attached, by which the loading and extracting of the cartridges is effected in the following manner:

On the interior face of the left side of the breech a cog wheel is mounted, with two horizontal racks; the one being placed above the other under this cog wheel, and parallel to the axis of the barrels, so that in moving one of these racks the other is moved by the cog wheel in the opposite direction. Part of the lower rack forms a vertical slot, in which the small crank on left side of the worm shaft works. The rotation of the latter consequently gives an alternating and opposite movement to the two racks, so that while one is going forward the other moves back, and reciprocally.

The Extractor.—The under rack forms the extractor; the upper one moves a piston which drives the cartridge into the barrels, the cartridge being placed before the piston, in the trough in which it moves; and during the time the barrels are motionless it is introduced into the one standing before the trough. The cartridge is not "driven home" entirely, but its head is in view of an inclined plane cut into the metal of the breech, on which it slides when it is moved by the rotation of the barrels. This completes the introduction of the cartridge into its chamber. The piston itself is a simple cylinder connected with the rack, and running in a slot in the conducting trough.

When the racks are in their extreme positions they remain still a moment. This stop is obtained by giving the slot in its centre part a circular shape concentrically to the shaft of the crank. This is necessary, because at the moment of the barrels arriving at the end of their course the head of the cartridge case becomes engaged in the hooks of the extractor, which would not be possible if it were in motion at the time.

The extractor is a large double hook at the end of the bottom

Digitized by Google

rack; it is very solid, and its proper working is certain under all circumstances.

After the cartridge is extracted from the barrel it strikes against an ejector, which pushes it out of the extractor, and it falls to the ground through an opening in the under part of the breech.

The Firing Pin has an elongation pointing downward, which by the operation of a spring is pressed against a cam on the worm, and as the worm rotates the cam drives the firing pin back and compresses the spring. The moment the firing pin becomes liberated it strikes the primer of the cartridge, and the discharge takes place. To obviate the difficulties which exist in other systems, when the cartridges are piled one upon the other, the opening of the introduction trough is closed by a little door or flap, which goes down by the weight of the cartridges, the first of which goes into the trough, and then the piston, in moving forward, raises the door and allows no more cartridges to enter until the proper time.

All parts of the mechanism are very strong and durable, and hardly exceed in number those of an ordinary small arm; there being, besides the group of barrels, thirteen parts.

The operation of the mechanism may be described as follows, supposing the crank to be in continual motion: A cartridge is placed in the introduction trough, the piston pushes it into the barrel, then the barrel begins to revolve, and the cartridge is carried on until it arrives before the firing pin, which penetrates the solid part of the breech, and which has in the meantime been retracted by the action of the cam. Then, as soon as the cartridge has arrived into this position the barrels cease to revolve, and the primer of the cartridge is struck by the firing pin and discharged. Then the revolution of the barrels begins again, and the fired cartridge shell is carried on until it comes to the extractor; this in the meantime has arrived up to the barrels and the cartridge head rolls into it. As soon as the head is laid hold of by the extractor, the barrels again cease to revolve, and during this period the cartridge shell is withdrawn and dropped to the ground.

As during every stoppage of the barrels the gun is supplied with a new cartridge, and the firing and extracting is also performed, during this time a continuous but slow fire is kept up. By supplying the gun in this manner with single cartridges, about thirty rounds per minute may be fired. Should rapid firing be required, the gun is

Digitized by Google

then supplied, not with single cartridges but with feed cases, containing groups of ten cartridges each, and in this manner from sixty to eighty rounds per minute may be fired.

Sizes in Use.—The three calibres in use are 1.46-in., 1.85-in., and 2.09-in., or in French units the 37 mm., 47 mm. and 53 mm. respectively, and firing projectiles weighing 1⅛ pounds, 2½ pounds and 4 pounds respectively.

The Projectiles are both shell and shot. Cast-iron shell, as giving a greater number of fragments than steel, are generally used with the Hotchkiss or Demarest fuze. The fuzes are very sensitive after the projectile is out of the gun, and the shells explode even on striking the water, so that the destructive effect of the gun is vastly increased, and the gun may be used as a range finder for heavy guns with excellent results, up to between 3000 and 4000 yards for the lightest gun. The fuzes will not act except when they receive a severe shock, such as that given by the discharge. The shells are therefore safe to handle and transport.

The penetrative power of the lightest gun is sufficient to send the projectile through and through any wooden vessel afloat when close aboard, and through 6 to 8 inches of oak at 1000 yards. When mounted on shipboard, the gun should be so mounted as to be depressed 60° below the horizon and be capable of not less than 180° train.

The cartridge cases may be used from 10 to 14 times by reloading.

General Conclusions.—With regard to this gun the following general conclusions may be reached: Its simplicity of construction and the solidity of its mechanism is a very decided advance in the matter of machine guns, but it is especially the use of projectiles which are hollow, yet at the same time heavy and explosive, which gives additional importance to the revolving cannon—a gun which but recently has been appreciated at its real value for what it is capable of doing. On board ship these guns will open fire at torpedo boats as soon as they get within a range of 1800 or 2000 yards, and experiments show that with the heavier calibres especially, neither men nor machinery would be sheltered from its fire by the plates at present used for the torpedo boats of moderate size, and under these circumstances it would be very difficult for the vessel to be reached.

For use in boats they will be extremely valuable as pieces of light artillery.

Digitized by Google

Besides, as these guns are light and unencumbered they can be mounted in elevated positions, for instance in tops, with a protection against musketry fire, and will then make the working of the exposed guns of the enemy extremely difficult, and compel the use of gun shields for exposed guns and port stoppers for guns not exposed. As a field piece it will compel the enemy's artillery to engage at a distance of not less than 3000 yards, and can be used most effectively against infantry, either in masses or deployed, its efficiency being limited only by the supply of ammunition.

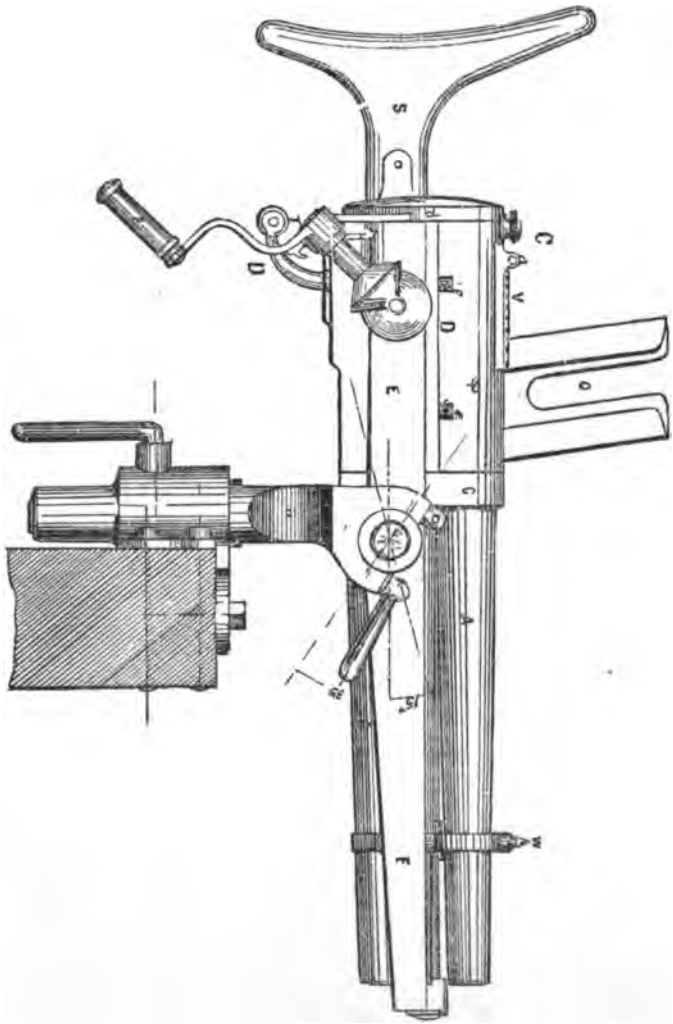

HOTCHKISS REVOLVING CANNON MOUNTED, ON BULWARK.

Scale $\frac{1}{11}$.

Elevation.

Digitized by Google

Digitized by Google

CHAPTER V.

NAVAL GUN CARRIAGES.

General Considerations.—The importance of providing the most perfect means of working guns is second only to the best material, form, and construction of the gun itself. That form of carriage approaches perfection which combines the qualities of smoothness, ease and rapidity of working, durability, strength and simplicity of parts, together with safety under all conditions of the sea.

Owing to the increase in size and power of modern naval ordnance, these qualities can only be obtained to any degree of efficiency by the aid of machinery. A modern naval gun carriage is then a powerful machine, of which there are numerous types, and which are constantly being improved to meet the advances made in the construction of guns.

Classes.—There are four classes of gun carriages for mounting heavy modern guns in battery. These are the *central pivot barbette carriage* for half turrets and barbette turrets, the *broadside carriage* for broadside guns, the *traversing carriage* for shifting guns, and the *turret carriage* for the armored turrets of monitors.

In each of these classes the carriage is composed of two parts—the carriage proper and the slide. The gun is mounted on the carriage, which moves in and out on the slide. The recoil is checked by means of hydraulic brakes. The slide is pivoted to the ship and gives the lateral train, except in the case of monitor carriages, where the lateral train is given by the revolution of the turret.

Broadside Carriages.—These are known as *gravity return carriages*, and are used for the 5-inch and 6-inch B. L. R. when in broadside. They are so called because the gun returns to battery by its own weight, owing to the inclination of the slide. This style of broadside carriage is shown in Plates XVII and XVIII. Plate XVII shows a longitudinal section through the axis of the recoil cylinder.

The general features are a low top carriage, which runs in and out on a slide inclined at about 8° to the deck line, a single hydraulic cylinder, and suitable training and elevating gear. The carriage

Digitized by Google

moves on ten rollers,* four on each side under the trunnions and one each at the rear of the carriage.

The Recoil Cylinder.—The recoil cylinder C is midway between the girders of the slide and projects about half its length in front of the slide. It is firmly attached to the slide. The piston rod is attached to the transom of the carriage at its after end; the transom bends down at this point to allow elevation to the gun. The piston fits the cylinder rather loosely.

Now, the recoil of guns may be controlled by hydraulic brakes in two ways, either by a *constant aperture* for the escape of liquid past the piston, in which case the pressure in the cylinder is variable, or by a *variable aperture*, in which case the pressure is constant if the aperture varies according to a law which may be determined for each gun and recoil with a given pressure. The latter plan giving a less maximum strain at any time on the cylinder, has been adopted in the carriages for the 5-inch and 6-inch guns.

To maintain a given constant pressure, grooves are cut in the cylinder, the shape of which when developed is shown in Fig. 3, Plate XVIII, being widest at the beginning of recoil. The grooves are three in number. The width of the groove and the depth to insure a given initial pressure are computed, and the form of the spiral side of the groove is found when the initial area is given with any assumed length of recoil. This will be explained in the Theory of the Recoil of Gun Carriages. The depth of the grooves is 0.15 of an inch. The cylinder is filled with a liquid, 4 parts glycerine, 1 part water.

Two Steel Wire Breechings, H, Plate XVII, are also fitted, to control the recoil in case of accident to the hydraulic brake. The ends of the breechings are shackled to bolts which are attached to the rear of the carriage transom and the front transom of the slide on each side of the cylinder. Between the bolt-heads and the transoms are powerful steel springs which ease the strain somewhat.

Buffers are fitted to the forward end of the slide to prevent shock when running out.

The Friction Drum and Toothed Wheel, I, Plate XVIII, Figs. 4 and 5, Plate XIX, are for the purpose of holding the gun in battery when there is motion on the ship. An axle is attached to the slide, having on one end a drum and a toothed wheel, the former being fitted with friction straps which may be set up against the drum by a

* The 5-inch carriage has eight rollers.

Digitized by Google

Digitized by Google

PLATE XIX.

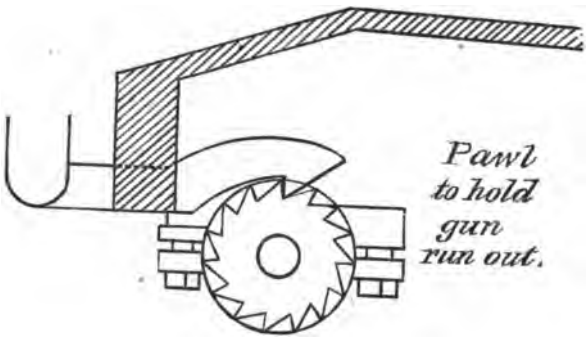

FIG. 4.

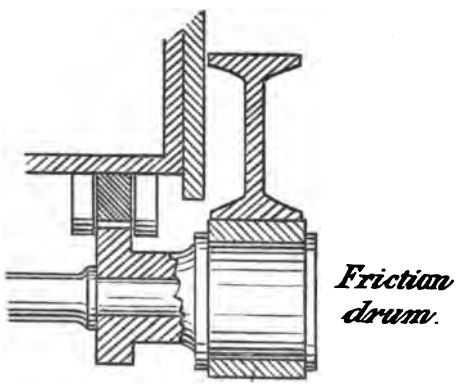

FIG. 5.

Digitized by Google

Digitized by Google

Plate XVIII.

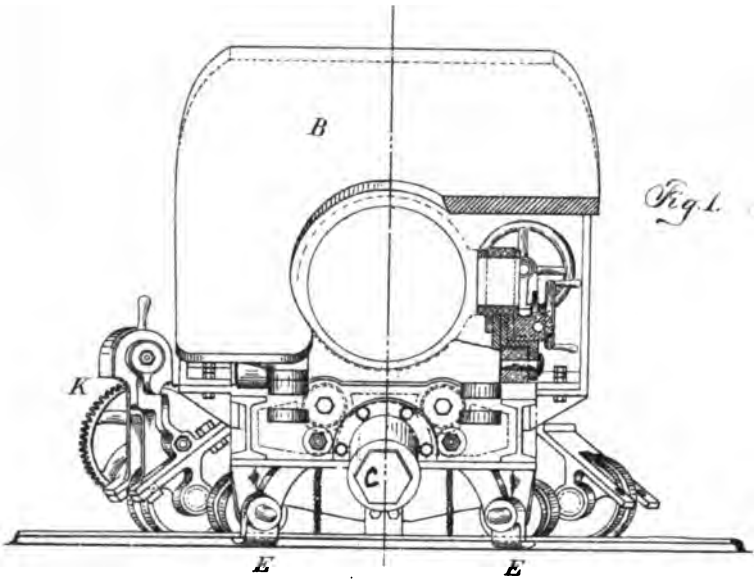

Fig. 1.

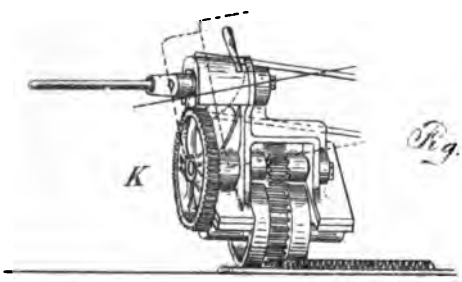

Fig. 2.

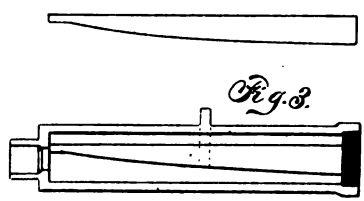

Fig. 3.

Digitized by Google

Digitized by Google

Plate XVII.

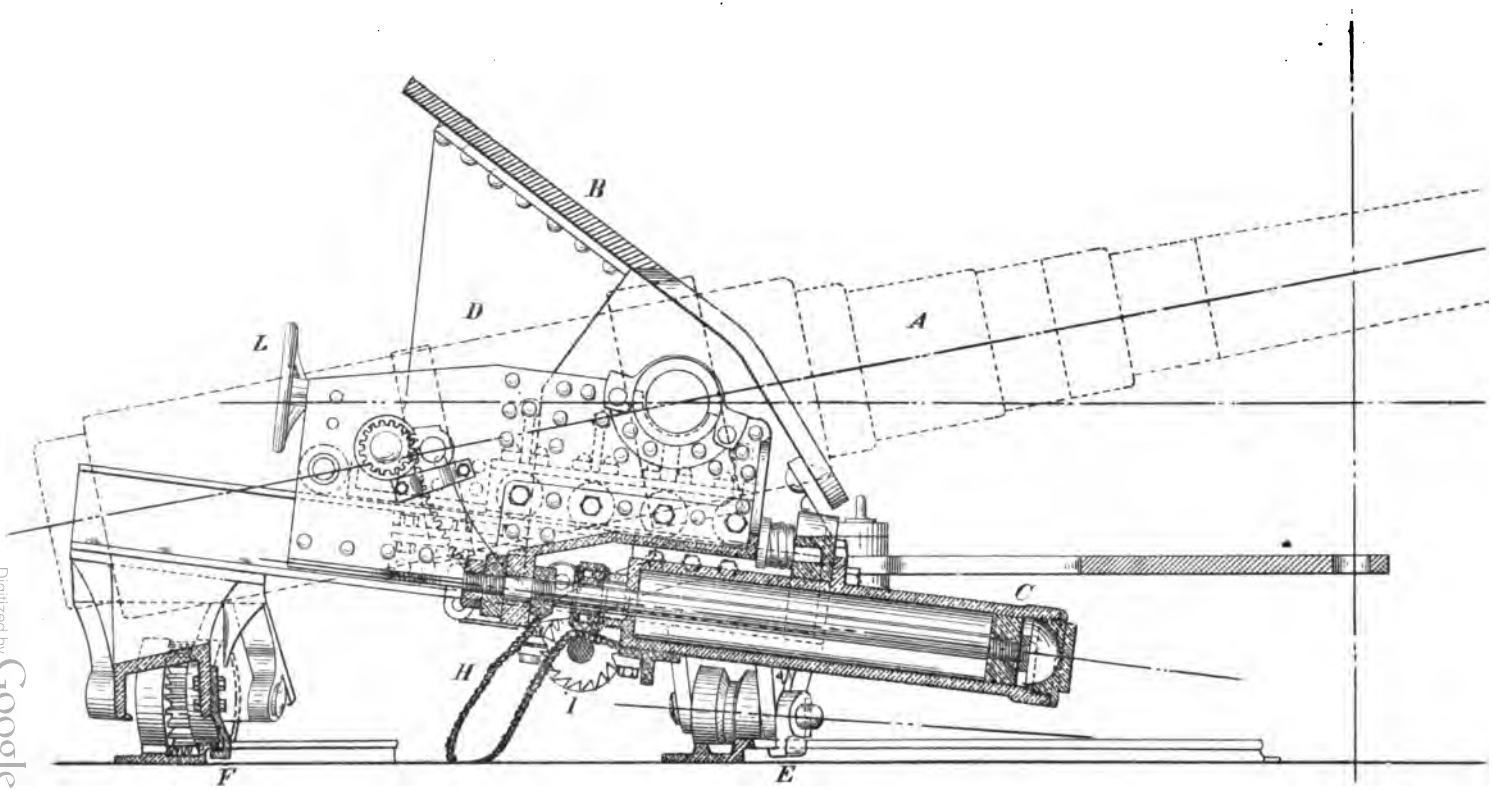

Digitized by Google

screw bolt. A pawl attachment to the carriage engages the toothed wheel when the gun is out to battery.

The friction on the drum is enough to prevent the gun from running in when the ship rolls heavily, but when the gun is fired the energy of recoil is sufficient to overcome the friction, the axle turns, frees the pawl, and the gun recoils until checked by the hydraulic brake.

The Length of Recoil is between three and four calibres with full charges.

The Training Gear.—The slide moves on four trucks and is pivoted by a yoke to the port sill. The front trucks are scored to fit a raised flange on the front tracks. The rear trucks are moved by gearing as shown in Fig. 2, the plane surfaces of the trucks being of such a diameter that the weight is taken on those surfaces. The gearing can be shifted to either side of the slide as may be necessary.

Clips, E and F, Fig. 1, Plate XVIII, and Plate XVII, are attached to the slide, and project under the flanges of the front and rear clip circles. The object of the clips is to prevent excessive jump of the front end of slide when the gun is fired, and of the rear end of the slide when the gun runs out.

The Gun Shield is an inclined plate of steel, B, two inches in thickness, and is bolted to the front end of the slide. It is supported at the sides and rear by plates, D, also bolted to the slide.

The Elevating Gear.—Elevator arcs are attached on each side to the small band on the gun. Gearing into the teeth of the arcs are pinions, the axles of which project through the brackets of the carriage. The hand wheels L, by worm gearing and pinions on the axles outside the brackets, raise and lower the breech of the gun as may be required. One of the pinions may be thrown out of action at will, and the breech raised and lowered by one wheel alone if so desired.

The Length of the Slide, as will be noticed, is such that, allowing the necessary recoil, the breech of the gun will project a short distance beyond the rear ends of the slide girders. In the case of the 5-inch carriage, the right girder is shorter than the left, to allow the breech plug to swing to right when loading with several degrees elevation.

Digitized by Google

The Barbette Carriage for VIII-inch B. L. R. is also a gravity return carriage and has a central pivot. See Plates XX and XXI.

General Features.—The carriage is supported on six trucks, T, four in front under or near the trunnions, and two at the rear (see Plate XXI); has two recoil cylinders, hand and steam training gear, and double elevating attachments.

The Recoil Cylinders, A, are attached to the carriage, the piston rods being attached to the front end of the slide. The pressure is maintained constant in the cylinder by grooves cut in the surface of the bore of the cylinder, and of similar shape to those described for the 5-inch and 6-inch broadside carriages. The carriage is secured for sea on the slide by the turnbuckles R, Plate XX.

Steel Wire Breechings, B, are also fitted to this carriage, and are shown in Plate XXI. The bolts to which they are shackled, and the steel springs to relieve the strain, are shown in Plates XX and XXI, C.

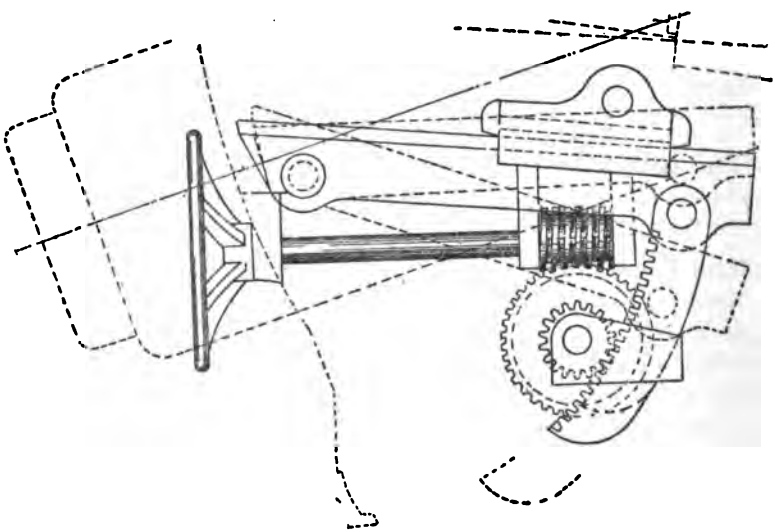

FIG. 6.

The Elevating Gears, D, are similar in action to those described for the broadside carriages. It is most desirable that it should be possible to fire a gun when the man who is working the elevator has

Digitized by Google

Digitized by Google

Plate XXII.

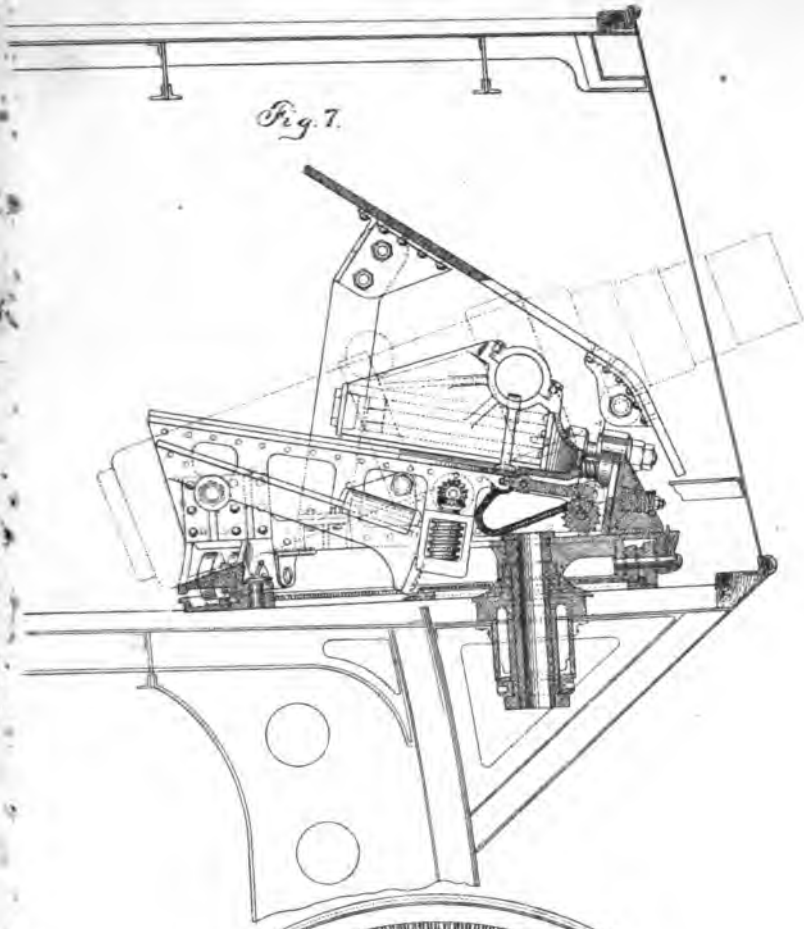

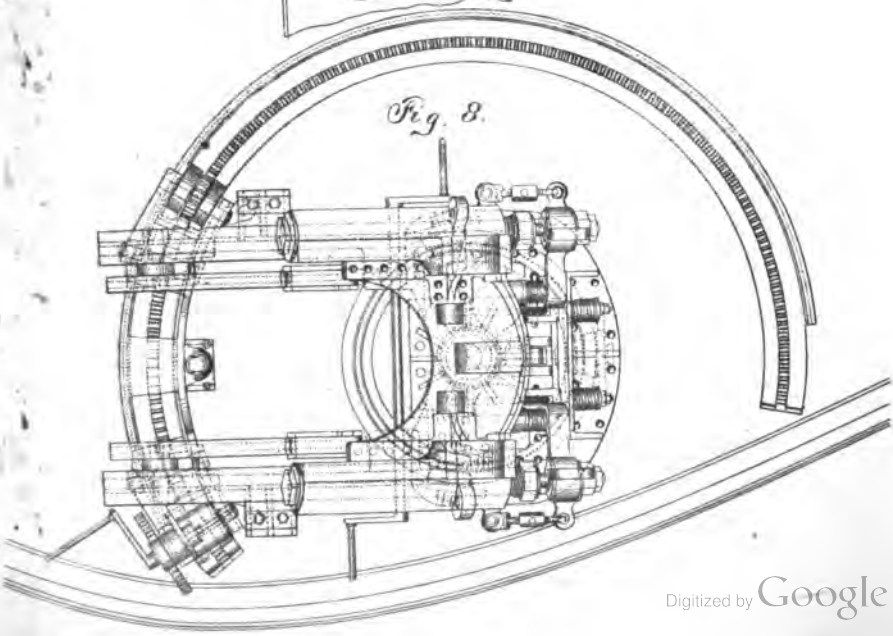

Digitized by Google

Digitized by Google

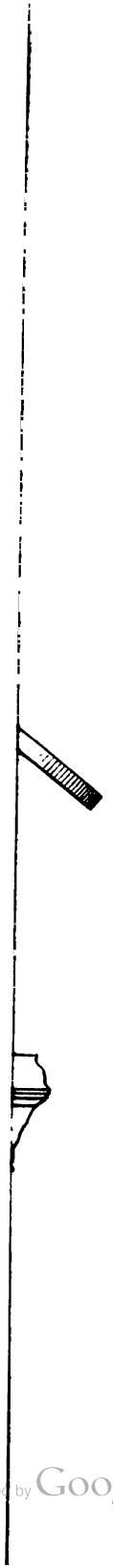

Digitized by Google

his hand on the wheel. Valuable time may be lost and inaccuracy of aim result by waiting for the elevating number of the crew to stand clear of the gun. A new apparatus has been designed for use with these carriages which, if found practicable, will allow this to be done. In the new design the elevating wheel is attached to the slide; a worm wheel on the end of the elevator shaft, by gearing, raises and lowers an elevator arc. One end, the upper one, of the elevator arc is attached to one end of a heavy bar which is pivoted to the slide at the other end. A small saddle attached to the gun moves back and forth on the bar as the gun recoils or runs out. See sketch, Fig. 6.

The Training Gear.—Steam power is used for training, the engine being placed on the orlop deck, the vertical shaft connecting directly with the slide. The engine is controlled at will at the gun by a hand wheel H, which works a shaft and pinion, S, and which latter operates the starting gear on the orlop deck by means of a rod through the hollow shaft. The slide is secured for sea to the deck by a securing bolt X, Plate XX. The steam power may be disconnected at will and the gun trained by hand. The cranks K, Plate XXI, by gearing turn the worm shaft M. The worm gears into a pinion on the shaft N, on the other end of which is the large pinion wheel O, which gears into the tracks on the deck.

The Gun Shield is of steel, two inches thick, and is attached to the slide, as shown in the plate.

Clips, P, P, Plate XX, are fitted to control the jump of the carriage on recoil, or when the gun runs out.

The carriage runs in and out resting on rollers which are let into the slide, the surfaces projecting slightly above the faces of the upper plates of the slide girders.

Half-Turret Carriage for VIII-inch B. L. R.—Another style of 8-inch carriage is shown in Plate XXII, Figs. 7 and 8. It is designed for half turrets such as those of the Chicago, and is a central pivot carriage. Its general features are: double recoil cylinders, steel wire breechings, elevating gear fitted so that the gun may be fired when the elevating numbers of the gun's crew have hold of the hand wheels, hand training gear, friction drum, toothed wheel and pawl to prevent the gun running in by its own weight, and a steel shield attached to the slide. The slide rests on five trucks, three of which are scored to fit the rib, and turn on a circular track of small radius under the trunnions; the other two support the rear of the slide

Digitized by Google

and gear into the training tracks. The gun runs in and out on rollers let into the slide.

The Traversing Carriage is also a gravity return carriage, pivoting with a yoke to the port sill. The slide is a little longer than that of the broadside carriage, and is fitted with traversing trucks, to allow the gun to be moved from one port to another. In general characteristics, however, it does not differ materially from the broadside carriage.

The Vavasseur Naval Gun Carriage.—This carriage, or some modification of it embodying its principles, is so universally used by foreign governments that it is deemed important to have an understanding of its working and good features. It is shown in Plate XXIII.

By reference to the drawing, in which the carriage trucks and training gear have been omitted for the sake of clearness, it will be seen that there are two cylinders, A and B, Fig. 1, fixed to the carriage, each moving on a piston fixed to a rod C and D attached to the slide. Each piston has two openings cut in it, which allow the liquid to pass through from one side to the other, but to the piston is attached a disk which moves around so as to close the openings in the piston as far as may be desired, Figs. 3 and 4. This closing action is effected by a rotary motion imparted to the disk by means of projections running in spiral grooves on the interior of the cylinder.

Supposing the piston and rod to be themselves incapable of rotation, then the closing action of the disk would be an unvarying one, depending on the spiral of the grooves. The piston itself, however, can be set in any desired position, so that the openings may be partly closed before recoil, and entirely closed at a corresponding point by the cylinder so as to limit the recoil absolutely. The value of this can be shown by pressure diagrams, which illustrate that with a very reasonable pressure indeed a very short recoil can be secured. Running out is effected by the gun's own weight, which acts as soon as a by-pass valve is opened, if the slide has sufficient inclination or the gun is run out by suitable machinery. The rate of running out being limited by the escape of a liquid through the by-pass valve, cannot be quickened inconveniently by the rolling of the ship. The arrangement is, therefore, especially adapted for use on shipboard.

The tendency to decrease or increase the space available for the liquid in the interior of the cylinders, from the entrance or exit of each successive length of piston rod, is obviated by attaching one

Digitized by Google

PLATE XXIII.

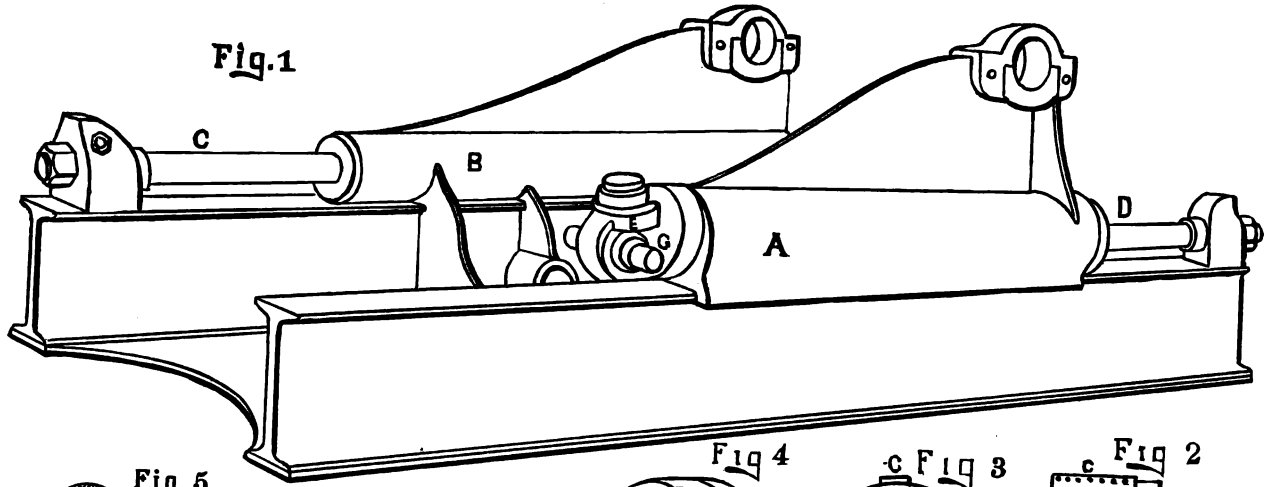

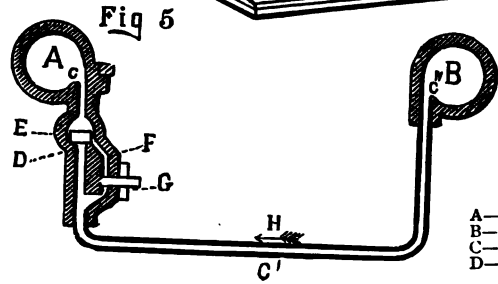

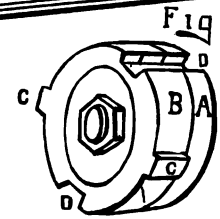

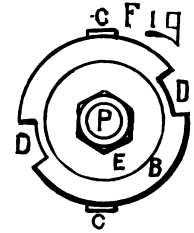

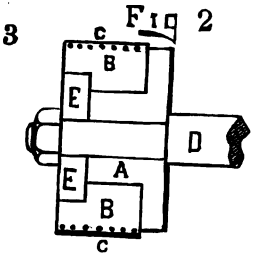

A—piston.
B—ring or valve.
C—ribs or valve.
D—passage through valve and piston.

A B—Compressor cylinders.
C C′ C″—pipe connecting the two cylinders.
D—check valve.
E—cap for check valve.
F—passage around check valve, or by-pass through which liquid flows to run out the gun to firing position.
G—cock which if closed prevents the gun from running out.
H—direction in which liquid flows during recoil.

Digitized by Google

Digitized by Google

piston rod to the front end of the slide and the other to the rear end, and making a communication from one cylinder to the other, so that the loss of space in one, by the entrance of piston rod, is compensated in the other by the corresponding increase of space due to the exit of its piston rod. For high power B. L. R. 6-inch, and a recoil of 36 inches, the slide is 9 feet long; for a recoil of 20 inches the slide need not project beyond the breech of the gun. Mr. Vavasseur now proposes to check recoil in about 3 calibres, though the exact amount is arbitrary, depending upon the strength of the cylinder, etc. Thus he would pull up a 12-inch gun in 3 feet. For broadside guns, especially for B. L. R., this short recoil gives great advantages.

To the under side of the carriage are fixed two cylinders of wrought iron or steel. These cylinders are connected together at the rear end by a pipe, and are rifled with two grooves. Each cylinder is fitted with a piston A, Figs. 3 and 4, working freely in the cylinder, on the circumference of which is cut a groove into which works a gun-metal ring or valve B, having two projections C, working into the two rifled grooves in the cylinders. Across each piston and valve are cut the two passages D, making two direct communications from one side of the piston to the other. The piston rods C, D, Fig. 1, of each cylinder are held by brackets fixed one at the front and the other at the rear end of the slide; by means of a short lever and adjusting screw, each piston can be moved round its axis and the passages in the pistons placed in any required position with respect to the openings in the valves; by this means the openings for the passage of the liquid from one side of the piston to the other can be enlarged or contracted at will, irrespective of the contraction of the openings due to partial rotation of the valve caused by the rifled groove during the recoil of the carriage. The piston rods being fixed one to the front and the other to the rear end of the slide, it is evident that as the cylinders move during recoil, one piston rod is being withdrawn from one cylinder while the other piston rod enters the other cylinder, and the liquid thus displaced by one piston rod flows through the pipe connecting the two cylinders, and compensates exactly for the deficiency caused by the withdrawal of the other rod. This arrangement allows both cylinders and connecting pipe to be kept full of liquid and entirely suppressing all air space. The amount of twist given to the grooves rifled in the cylinders is such that while the passages in the piston may be full open at the commencement, they may be nearly or wholly closed at the end of the recoil. To regulate the movement of the

Digitized by Google

gun while running out, a valve is placed in the pipe connecting the two cylinders; this valve opens by the pressure caused in the rear end of one cylinder during the recoil of the gun, and it is evident that when closed so that no liquid can pass from one cylinder to the other, the gun carriage cannot move, as any movement in either direction would be to force one of the piston rods into a cylinder already full. The movements of the valve are controlled by a lever carrying a roller, moving on a guide bar, placed inside one guide of the slide. The action of the brake is as follows: The pistons are first adjusted to give the amount of opening necessary for the recoil desired, the amount of opening required of course varying with the charge of powder; as the cylinders move along the slide during recoil they, by means of the rifled grooves, partially rotate the valves carried by the pistons, and thus gradually contract the openings in the pistons till the gun is brought to a state of rest, where it is kept by the closing of the running-out valve, which cuts off all communication between the two cylinders. This is effected by an incline on the rear end of the guide bar which controls this valve. To run out the gun the incline at the rear end of the guide bar is raised, this opens the running-out valve, and the carriage being mounted on rollers, the gun runs forward by gravity, if the slide has sufficient incline, or by any suitable mechanical means. This valve is kept open and closed automatically by the roller working on the guide bar, which is at that point inclined downwards. At the end of the recoil the valves never quite close the openings in the pistons, and as the pistons themselves fit easily, there is plenty of room for the flow of the liquid past the piston as soon as the running-out valve is opened.

The advantages claimed for this brake over the ordinary hydraulic buffer are: (1) That the gun is controlled automatically while running out. (2) The opening in the pistons for the passage of the liquid can be made so large at the commencement of recoil in comparison with those of the ordinary buffer, that it reduces very much the strain on the fighting bolt. (3) By moving two levers the passages in the pistons can be readily adjusted, and the recoil regulated for different charges. (4) The movement of the valves regulating the openings in the pistons is so uniform, unvarying and exact that there must be great uniformity of recoil, especially as the gun and carriage are mounted on rollers, and the irregularity of recoil due to the friction of surfaces sliding one over another, sometimes clear and sometimes dirty, and sometimes partially lubricated, is avoided.

Digitized by Google

Digitized by Google

PLATE XXIV.

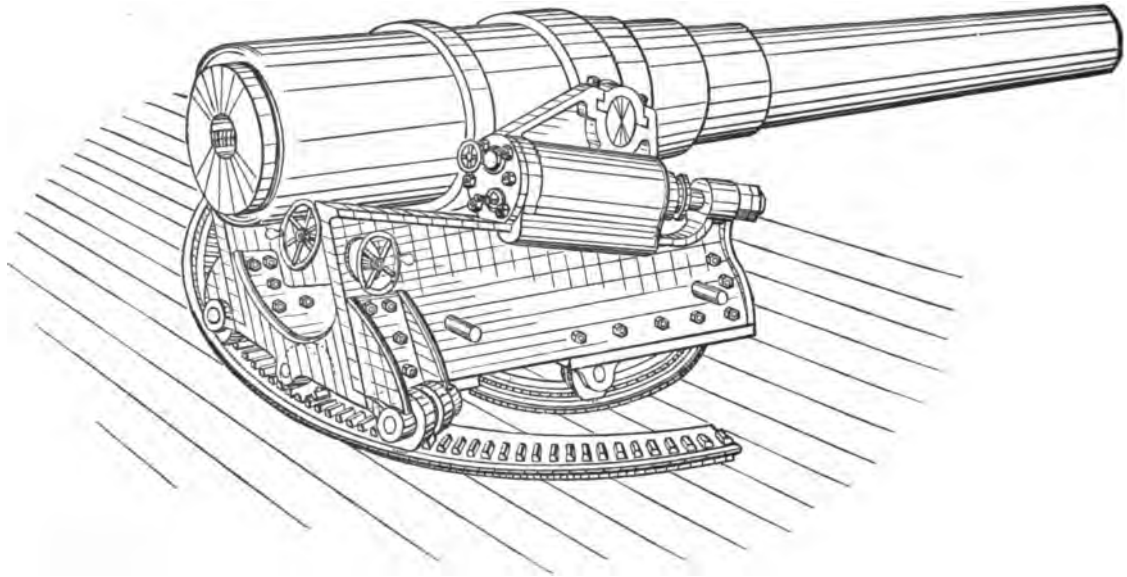

THE POWLETT CARRIAGE.

Digitized by Google

The advantage claimed for this brake over all others of its class is the entire absence of all packing in the pistons, of valves controlled by springs, difficult of access, uncertain and irregular in their action; it also leaves the carriage free to move at the beginning of recoil and does not stop it suddenly at the end, so that all shocks and concussions are avoided.

Turret Carriages have been designed for the 10-inch B. L. R. The guns having no trunnions, rest in saddles which slide in and out on heavy girders, the guns being run out to battery by hydraulic machinery. The whole framework supporting the gun is pivoted for vertical motion to the turret beneath the port, the rear resting on powerful hydraulic jacks, the elevation being given by tipping the gun and carriage together.

The guns are trained laterally by motion of the turret. Arrangement is made to place both guns under the perfect control of the officer operating the turret. By suitable levers he elevates the gun, trains the turret, and at the proper moment may fire either of the guns or both together.

The Pneumatic or Powlett Gun Carriage.—This carriage has been ordered for experiment with naval guns and, if successful, may be adopted for the heavier calibres. It consists of an improved slide fitted with suitable cross transoms and angle knees for the support of the cylinders which control the recoil and run out the gun, and which are placed underneath the gun and between the slide rails in such a manner as to diminish the chances of disarrangement by small projectiles or fragments of shell in action.

A top carriage supports the gun. A rack piece runs along the inside of one of the slide rails with a rolling, eccentric clutch, with a lever attached to its collar, so that when the gun is fired and the recoil is checked the lever falls and automatically prevents the gun from running out until it is so desired. The recoil and running-out cylinders are firmly fixed to the cross transoms of the slide, and are fitted with air-tight pistons, the rods of which are secured to the forward transom of the top carriage. The attachment of the collar of the piston rod to the transom has a slot motion, so arranged that when the gun is fired there is sufficient play not to strain the piston rod in the gland stuffing box at the forward end of the cylinder head.

The recoil and running-out cylinders are fitted with supply and exhaust pipes, with reversing valves or cocks, whereby compressed

Digitized by Google

air, furnished from below by a pumping engine, may be supplied to either end of the cylinder, at will, by moving the lever attached to the stem of the reversing valve forward or backward for running out or running in. By leaving the valve open, admitting air to the rear when the gun is out, the gun may be fired and the recoil will be taken up by the pressure of any number of pounds of compressed air. If desired, the clutch lever before mentioned may be thrown out of action and the gun will return to battery automatically after each fire.

To train this carriage, a pair of oscillating cylinders is placed at the rear of the slide, underneath, the piston rods of which attach by worm wheel and gearing directly with the cogged racer wheels. These cylinders are placed at such an angle that there is no centre of axis of motion, and are fitted each with two supply pipes which lead to the ports or base of the cylinders on both sides of the trunnion supports of the cylinders. By moving a lever to the right or left, the training engine will follow that motion and train the breech of the gun to the right or left as desired. The elevating gear of this carriage is operated by an upright cylinder, with sufficient drift to give instantaneously the extreme elevation or depression desired, by the action of compressed air. On either side of the gun are racked standards with a movable slot, having a compressor screw, encompassing a slot plug, by which with one-half turn of the screw lever the breech of the gun is secured at any angle of elevation or depression desired.

The carriage is also fitted with a mechanical recoil check, which may be used in case of accident to machinery or pipes. The advantages of this carriage seem to be, aside from strength and stability, ease of working, quick and smooth training, simplicity of construction, and endurance. Its disadvantages are its liability of being disabled by the pipes and cylinders being cut by machine and rapid-firing gun projectiles and fragments of shell. All gun carriages are liable to accident from these sources, and it would seem possible to lead the supply pipes through armored conduits.

Mounts for Rapid-Firing and Machine Guns.—Rapid-firing guns are mounted, in towers or in broadside, on different forms of carriage, some of which are yet experimental. Those furnished by the Hotchkiss Gun Company with their guns are of two styles for the 3-pounder and 6-pounder guns. For the mount used with the 1-pounder gun see chapter on Rapid-Firing Guns.

Digitized by Google

Digitized by Google

Plate XXVI.

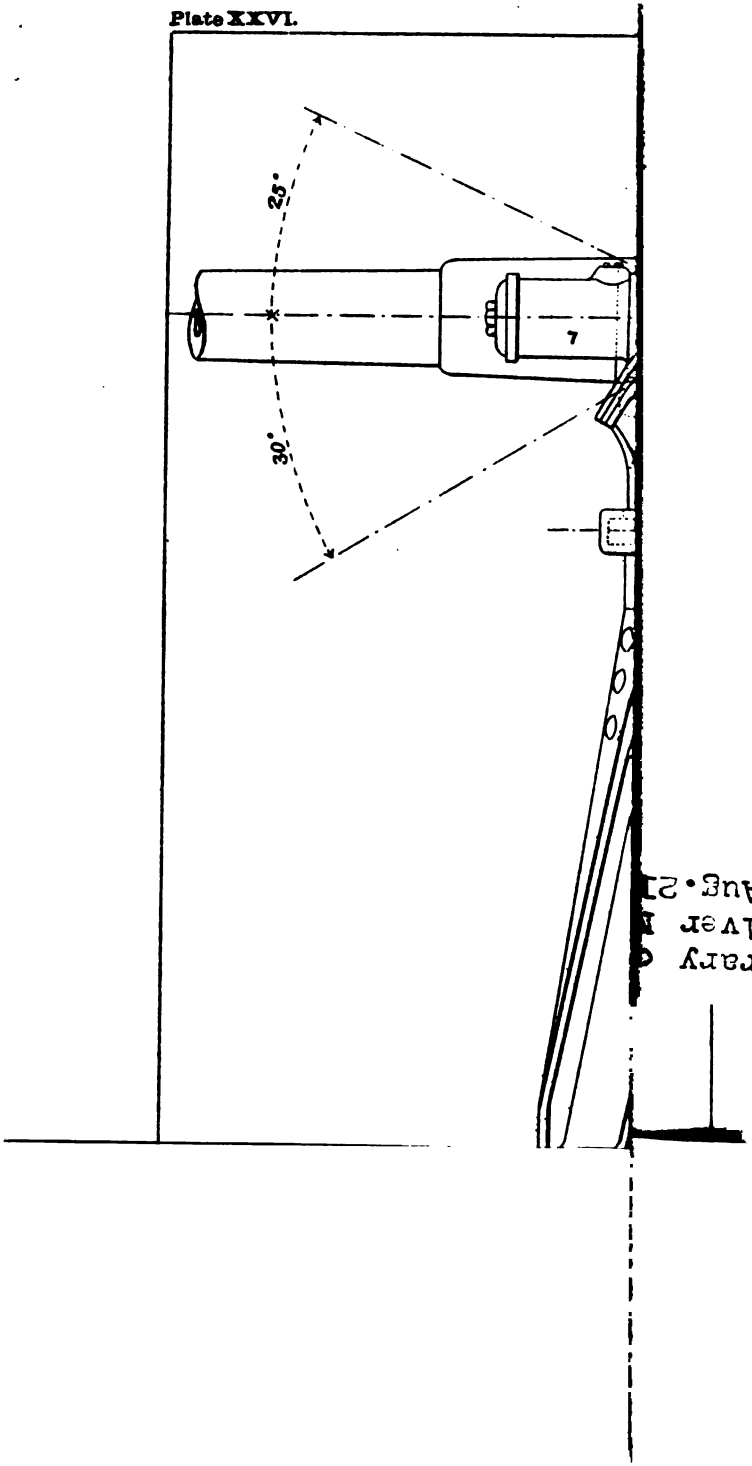

Library of Oliver Aug. 21

Digitized by Google

Library
Oliver
Aug.

Digitized by Google

NON-RECOIL MOUNT.

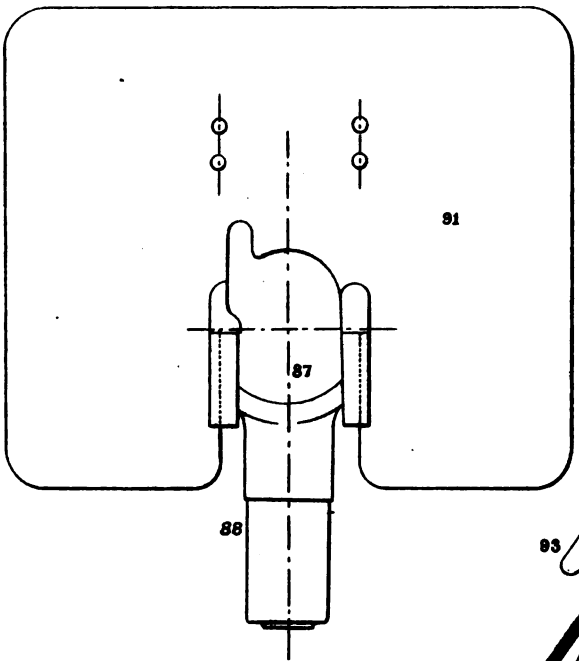

Front View of Pivot and Shield.

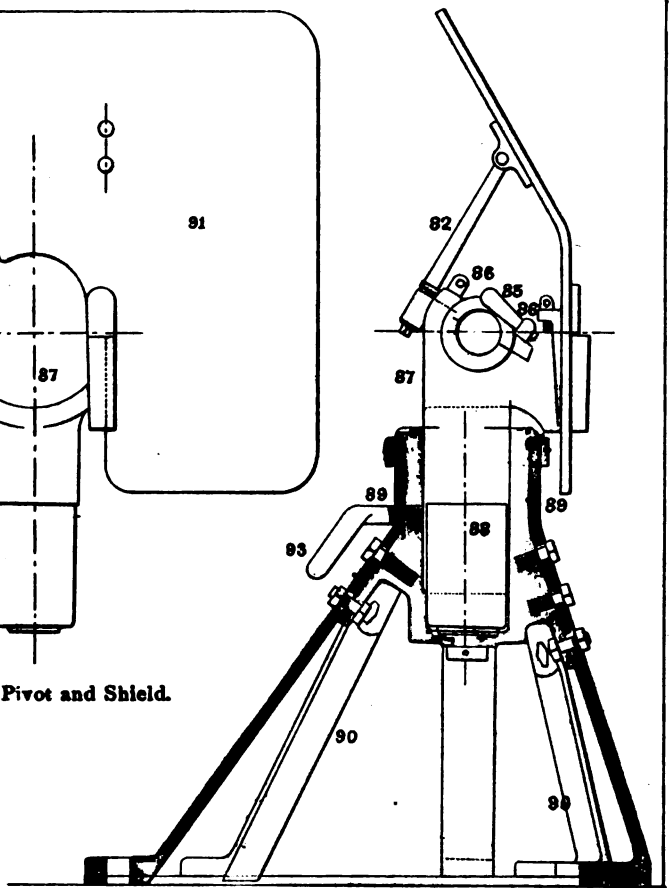

Section through A B.

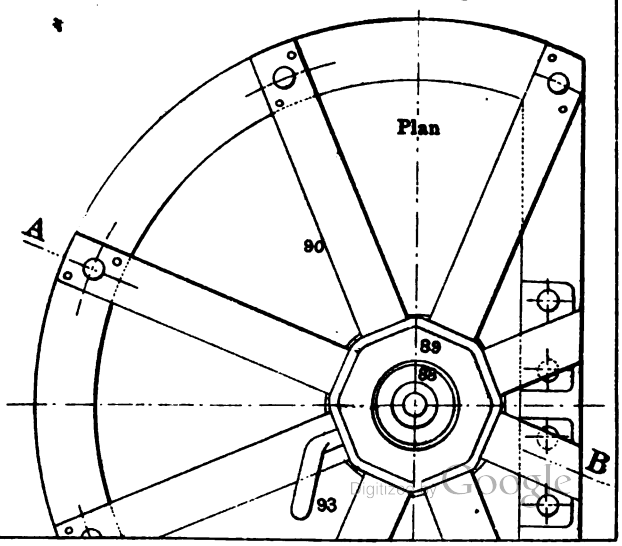

Digitized by Google

The Non-Recoil Mount.—See Plate XXV.

Nomenclature.—(85) Cap squares; (86) cap square bolts; (87) fork; (88) pivot; (89) socket; (90) crinoline stand; (91) shield; (92) shield stays; (93) clamp.

Description.—The gun-metal pivot is fork-shaped, and supports the gun entirely by its trunnions. The cap squares are screwed down instead of being fitted in the ordinary manner, as, in order to prevent damage to the metal through the shock of recoil, the trunnions must fit exactly all around in their bearings. The pivot fits into a gun-metal socket, with just sufficient play to allow it to rotate freely. The two parts together form a universal joint for the gun, giving it free play for aiming in any direction.

The crinoline stand is formed of the socket, about which are secured eight iron legs, which diverge and are attached to a D-shaped base ring, so that the gun may be mounted close out to a rail or bulwark. The ten bolts which fasten the stand down to the deck pass through the base ring and also through the legs.

The stand is of such a height as to give the gunner an easy position in aiming.

The shield is attached to the pivot at its lower edge and by two stout stays above its centre. It completely covers the gunner in aiming, moves with the gun, and by its inertia relieves the deck fastenings of quite an amount of strain in firing.

The gun is secured by means of two clamps, one bearing on the pivot, the other gripping the right trunnion.

Recoil Mount.—Plate XXVI.

Nomenclature.—(1) Stand; (2) clip ring; (3) pivot; (4) pivot bolt; (5) gun slide; (6) trunnion boxes; (7) hydraulic cylinders; (8) spring cylinders; (9) piston; (10) piston rods; (11) stuffing boxes; (12) clamping arc; (13) clamps; (14) stock; (15) deflector; (16) lanyard; (17) trigger cover.

Description.—This mount is designed for use upon torpedo boats, steam launches, or decks whose beams are of too light scantling to resist the firing strains with the non-recoil mount. It is arranged to be trained and fired directly from the shoulder. At all angles of elevation and depression, the axes of the bore and the recoil cylinders are in the same plane, so that all destructive shocks on mount and platform are absorbed by the hydraulic cylinders.

Digitized by Google

The Stand is a hollow casting closed on top, which supports the moving parts of the mount. A circular recess in the upper surface receives the pivot bolt. For mounting on decks, it is provided with legs (Fig. 1), as in the non-recoil mount, and for use on torpedo boats and steam launches it is formed (Fig. 2) to fit the top of the conning tower, or other special positions.

The Clip Ring is a bronze flanged ring which holds the stand and pivot together, whilst permitting the latter to rotate in training.

The Pivot is a fork-shaped steel casting, with bearings for the trunnions of the gun slide. It is tapped in the centre to receive the pivot bolt which supports the whole system.

The Gun Slide is a single bronze casting, which supports the piece and constrains it to recoil in the line of the axis of the bore.

The Trunnion Boxes are steel castings which receive the trunnions of the piece. They rest on the gun slide, to which they are secured by stout clips, and move with the piece during recoil. The piston rods are screwed into them from the front, and to the rear they bear against the spring cylinders.

The Hydraulic and Spring Cylinders are part of the casting which forms the gun slide. The former are of the coned type, and are provided with stuffing boxes for the passage of the piston rods. The pressure in the two is equalized by a connecting channel passing through the front part of the gun slide. The telescopic spring cylinders contain heavy coiled springs under an initial compression, and bear against the trunnion boxes. The energy of recoil is absorbed by the hydraulic cylinders, and the piece immediately returned to the firing position by the springs.

The Stock, similar to the one used with the non-recoil mount, is bolted to the left cheek of the gun slide instead of to the piece itself.

The Lanyard.—The piece is fired by means of a lanyard which passes through the deflector conveniently to the hand of the gunner. The trigger is masked by a light cover to prevent attempts to fire the gun by hand.

Tripod Mount for the 1-Pounder.—The 1-pounder is sometimes mounted on a tripod, the legs resting in shoes on the deck. The mount is secured to the deck by suitable fastenings to prevent excessive jump.

Digitized by Google

Digitized by Google

Plate XXVII.

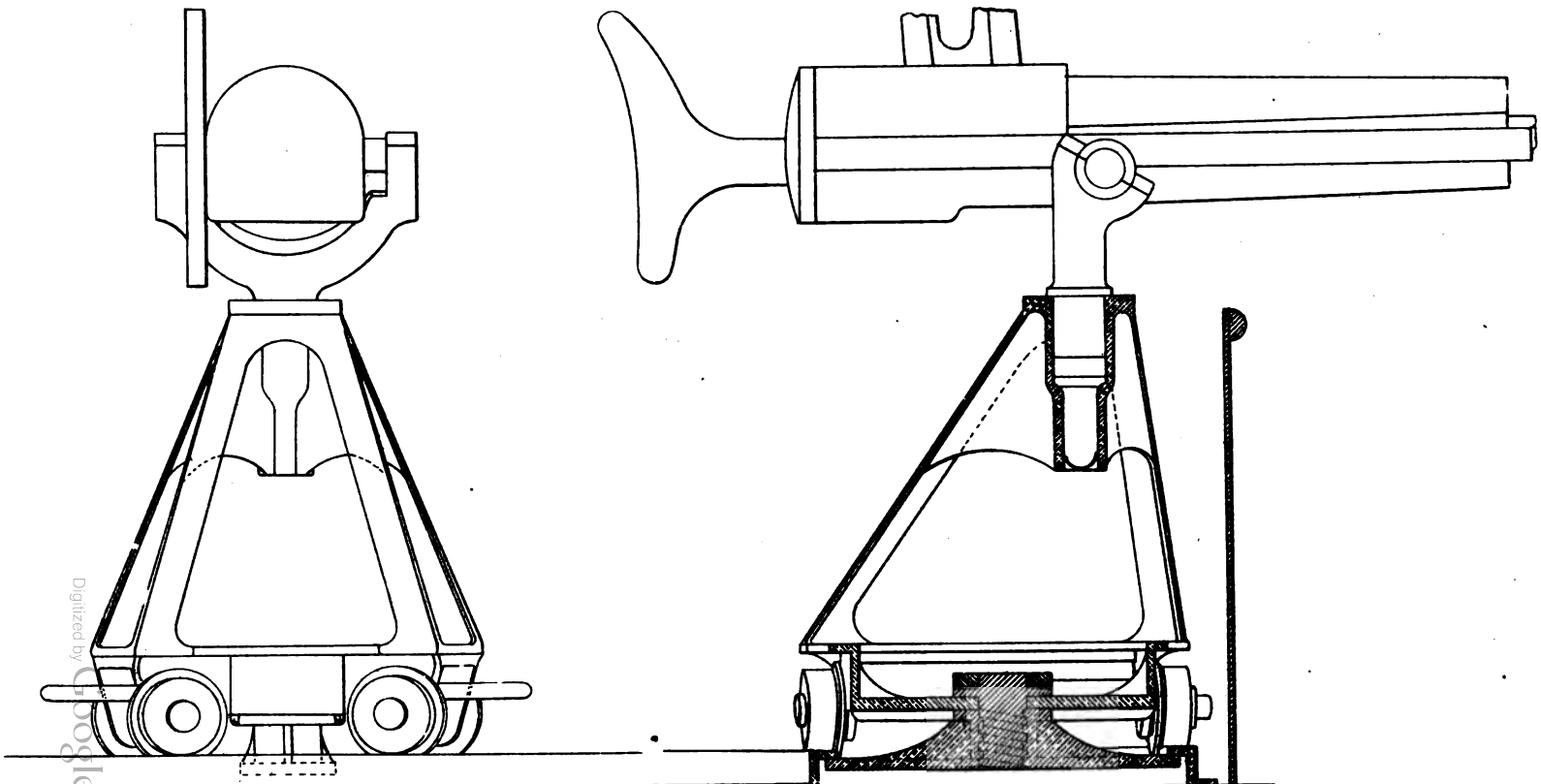

Digitized by Google

Mounts for Machine Guns.—*Gatling guns* when used in tops, boats, or along a ship's rail, are usually mounted on tripods similar to those described for the 1-pounder rapid-firing gun.

The 37 mm. and 47 mm. Hotchkiss guns are, when mounted in towers, or along the rails of a ship, fitted with non-recoil mounts. Along the rail, the shelf pattern or some similar design (see figure at end of chapter on Machine Guns) is used; when mounted in tops, the shelf or Trolley pattern may be used, see Plate XXVII.

The Recoil of Gun Carriages.—The recoil of modern naval gun carriages is generally controlled by friction compressors, or by hydraulic cylinders, the exception being the pneumatic gun carriage, in which the controlling force is the pressure of compressed air in recoil cylinders.

In Sladen's "Principles of Gunnery," Chap. II, p. 17, the following formula is given for the velocity of recoil,

$$V'' = \frac{(w + C\omega')}{W''} \cdot v,$$

in which

V'' = the velocity of recoil in f. s. when the projectile leaves the bore.

v = the muzzle velocity of the projectile.

ω = weight of projectile in pounds.

w' = weight of charge in pounds.

W'' = weight of gun and carriage in pounds.

C = a coefficient determined by experiment.

In the case of high-powered guns, when the weight of charge is one-half the weight of the projectile, the value of C may be taken as unity for the work of computing the pressure, length of recoil, and area of aperture in the case of hydraulic cylinders. If the weight of charge is one-quarter the weight of projectile, take $C = \frac{3}{4}$; and when the weight of charge is one-eighth the weight of the projectile, take $C = \frac{1}{2}$. These values are only approximate, it must be remembered.

The Friction Compressor.—Let α be the inclination of the slide, and f the coefficient of friction between the carriage and slide; the resistance to recoil without the compressor is

$$W''(\sin \alpha + f \cos \alpha).$$

If there are n surfaces of friction in the compressor, with the pressure P between them, and if f' be the coefficient of friction for the

Digitized by Google

materials of which the compressor is made, the resistance of the compressor is

$$f'nP.$$

The energy of recoil is $\frac{W''V''^2}{2g}$; and if l feet be the length of recoil, we have

$$\frac{W''V''^2}{2g} = lW''(\sin\alpha + f\cos\alpha) + lf'nP.$$

Calling $\beta = \sin\alpha + f\cos\alpha$, this becomes

$$\frac{W''V''^2}{2g} = l(W''\beta + f'nP);$$

whence we have for the recoil in feet,

$$l = \frac{W''V''^2}{2g(W''\beta + f'nP)}; \qquad (1)$$

and with an assumed length of recoil of l feet, the pressure in pounds on each of the n surfaces, in order to limit the recoil to l feet, is

$$P = \frac{W''(V''^2 - 2gl\beta)}{2glf'n}. \qquad (2)$$

The Circular Friction Brake.—When the recoil is controlled by a circular friction brake, as in the 60-pounder directing bar carriage, if u is the coefficient of friction between the strap and pulley when in motion, the ratio of the tensions at the ends of the strap is

$$\frac{t}{t_0} = \varepsilon^{ua},$$

a being the ratio of the length of the arc of contact to the radius of the pulley. If the tension on the strap is uniform when the recoil commences,

$$t_m = \frac{t + t_0}{2},$$

t_m being the uniform tension. The friction between the strap and pulley is evidently $t - t_0$. Calling this F, we have three equations by means of which we can eliminate the unknown tensions t and t_0,

$$t + t_0 = 2t_m, \qquad (3)$$

$$t - t_0 = F, \qquad (4)$$

$$\frac{t}{t_0} = \varepsilon^{ua}. \qquad (5)$$

From (4) and (5),

$$F = t_0(\varepsilon^{ua} - 1),$$

and from (3) and (4),

Digitized by Google

$$t_0 = t_m - \frac{F}{2},$$

$$\therefore \quad F = \frac{2t_m(\epsilon^{ua} - 1)}{\epsilon^{ua} + 1}. \tag{6}$$

If R is the radius of the pulley, and r that of the pinion which engages the rack on the slide, or directing bar, the resistance of the compressor will be $\frac{R}{r}F$, and the whole resistance if the slide be inclined is $W''\beta + \frac{R}{r}F$. Hence the length of recoil is

$$l = \frac{W''V''^2}{2g\left(W''\beta + \frac{R}{r}F\right)}, \tag{7}$$

F being computed from equation (6). If $a = \frac{3}{2}\pi$, $u = .2$ and $t_m =$ 500 pounds, F will be equal to 439 pounds.

The Hydraulic Brake.—There may be two cases: first, when the aperture for escape of liquid past the piston is constant in area, in which case the pressure in the cylinder will be variable, having a maximum value at the beginning of recoil; second, when the area of aperture is variable, being so adjusted that the pressure in the cylinder will remain constant throughout the whole length of recoil.

A Constant Aperture and Variable Pressure.—If the slide be inclined, we have for the resistance, without the hydraulic brake, $W''\beta$; and if P_0 is the whole pressure on the piston of the hydraulic cylinder at the beginning of recoil, we have for the whole resistance at the beginning of recoil,

$$R = P_0 + W''\beta,$$

neglecting the friction of the liquid.

To find P_0, imagine the pressure P_0 to be caused by a column of liquid of height h feet, and we have $P_0 = \rho hA$. ρ is the weight of a cubic foot of water, A is the area of the piston in feet. The velocity of escape of liquid will evidently be $v = \sqrt{2gh}$; but if V_0 is the velocity of recoil and of the piston at the beginning, and u_0 is the area of the aperture for the escape of liquid past the piston,

$$vu_0 = V_0A, \text{ and } v = \sqrt{2gh},$$

$$\therefore \quad h = \frac{V_0^2A^2}{2gu_0^2}.$$

Digitized by Google

Substituting this value of h in the expression for P_0, we have

$$P_0 = \frac{\rho A^2 V_0^2}{2gu_0^2}. \tag{7}$$

This is the maximum pressure in the cylinder. The pressure at any time after the beginning of recoil denote by P, and the corresponding velocity of recoil by V. Then

$$P = \frac{\rho A^2 V^2}{2gu_0^2}.$$

If R is the whole resistance to recoil at any time after the beginning, we have

$$R = \frac{\rho A^2 V^2}{2gu_0^2} + W''\beta; \tag{8}$$

and for the acceleration along the axis of the cylinder, if x is the distance measured from the beginning of recoil,

$$\frac{d^2x}{dt^2} = -\frac{R}{M} = -\frac{gR}{W''},$$

M being the mass of the moving parts; then

$$\frac{d^2x}{dt^2} = -\frac{\rho A^2 V^2}{2W''u_0^2} - g\beta. \tag{9}$$

From this it appears that the acceleration is of the form $-mV^2 - n$, letting $m = \frac{\rho A^2}{2W''u_0^2}$ and $n = g\beta$. Hence

$$\frac{dx}{dt} \cdot \frac{d^2x}{dt} = -(mV^2 + n)\,dx,$$

or

$$\int_0^x dx = -\int_{V_0}^{V} \frac{V\,dV}{mV^2 + n},$$

since $\frac{dx}{dt} = V$, and $\frac{d^2x}{dt} = dV$; whence

$$x = \frac{1}{2m} \log_\epsilon \frac{mV_0^2 + n}{mV^2 + n}. \tag{10}$$

Solving for V^2, we have

$$V^2 = \frac{1}{m}\left(\frac{mV_0^2 + n}{\epsilon^{2mx}} - n\right), \tag{11}$$

when $x = l$, the length of recoil, $V = 0$; and (10) becomes

$$2ml = \log_\epsilon \frac{mV_0^2 + n}{n}, \tag{12}$$

from which m may be determined. For use with common logarithms (12) becomes

$$2ml(\log_{10}\epsilon) = \log_{10} \frac{mV_0^2 + n}{n}. \tag{13}$$

Digitized by Google

m having been determined from (13), we have for the area of aperture

$$u_0^2 = \frac{\rho A^2}{2m W''}; \tag{14}$$

and since $m = \frac{\rho A^2}{2 W'' u_0^2}$, we have for the maximum pressure

$$P_0 = m \frac{W'' V_0^2}{g}. \tag{15}$$

Formulas (13), (14), and (15), then, are those necessary to find the area of aperture and maximum pressure in the cylinder for any given length of recoil, with an assumed area of piston and a known velocity of recoil.

A Variable Aperture and Constant Pressure.—The notation being the same as in the first case, and in addition let u be the area of aperture at any time after the beginning of recoil, we have as before

$$v = \sqrt{2gh},\ V = \sqrt{\frac{2gP_1}{\rho A}},$$

since $P_1 = \rho h A$. But $v = \frac{VA}{u} = \frac{V_0 A}{u_0}$; also $P_1 l = \frac{W'' V_0^2}{2g}$, if V_0 is given. Hence v is constant. Therefore

$$\frac{V_0 A}{u_0} = \sqrt{\frac{2gP_1}{\rho A}},$$

and

$$P_1 = \frac{\rho V_0^2 A^2}{2g u_0^2}, \tag{16}$$

the expression for the constant pressure. The whole resistance to recoil will be at any time

$$R = W''\beta + \frac{\rho V_0^2 A^2}{2g u_0^2}.$$

Calling x the distance of recoil at any time taken along the axis of the cylinder, we have as before,

$$\frac{d^2x}{dt^2} = -\frac{2R}{W''} = -g\beta - \frac{\rho V_0^2 A^2}{2 W'' u_0^2}.$$

The acceleration is therefore constant, and the velocity of recoil will be uniformly decreased from the beginning. The motion of the body will therefore be in all respects similar to that of a body projected vertically upwards and retarded by the action of gravity.

Digitized by Google

We have

$$\frac{d^2x}{dt^2} = -m, \text{ a constant,}$$

$$\frac{dx}{dt} = V = -m_1t + C,$$

when $t = 0,\ V = V_0 \therefore C = V_0,$

and $$V = V_0 - m_1t. \tag{17}$$

Integrating again,

$$x = V_0t - \frac{m_1t^2}{2} + C.$$

When $t = 0,\ x = 0,$

$$\therefore\ x = V_0t - \frac{m_1}{2}t^2. \tag{18}$$

From (17), when $V = 0$, $t = T$, the whole time of recoil, and $T = \frac{V_0}{m_1}$.

When $x = l$, the whole length of recoil, we have

$$l = V_0T - \frac{m_1}{2}T^2.$$

Substituting the value of T, $l = \frac{V_0^2}{2m_1}$, whence

$$m_1 = \frac{V_0^2}{2l}.$$

From (17) and (18) we have

$$x = V_0\frac{V_0 - V}{m} - \frac{1}{2m}(V_0 - V)^2.$$

Substituting the value of m,

$$V^2 = V_0^2\left(1 - \frac{x}{l}\right). \tag{19}$$

But we have $$\frac{V}{V_0} = \frac{u}{u_0}.$$

Hence $$u^2 = u_0^2\left(1 - \frac{x}{l}\right), \tag{20}$$

a formula by which the area of aperture u may be found for any distance x of recoil.

In the case of the Vavasseur gun carriage, the interior of the cylinder is rifled, and the form of the developed groove can be computed by (20) if the depth of the opening is constant or nearly so. In the case of the Gravity Return carriages, one edge of the groove in the cylinder is an element of the cylinder; the curve of the other edge may evidently be computed by (20).

Digitized by Google

To find the Initial Area of a Variable Aperture for any given Length of Recoil.—Equating the energy of the moving parts to the resistance multiplied by the distance through which it acts, we have

$$\frac{W'' V_0^2}{2g} = \left(\frac{\rho A^2 V_0^2}{2g u_0^2} + W'' \beta \right) l,$$

whence

$$u_0^2 = \frac{\rho A^2 V_0^2 l}{W'' (V_0^2 - 2g\beta l)}. \tag{21}$$

If $V_0 =$ infinity, $u_0^2 = \frac{\rho A^2 l}{W''}$. Again, if the hydraulic brake does all the work of restraining the recoil—a safe assumption to make in designing gun carriages—$a = 0$, and $f = 0$, hence $\beta = 0$, and again

$$u_0^2 = \frac{\rho A^2 l}{W''}, \tag{22}$$

or the initial area of aperture does not depend upon the value of V_0, the initial velocity of recoil. Recapitulating, equations (22) and (20), together with (16), are those used to compute the initial area of aperture, the area at any point of recoil, and the constant pressure in the cylinder for a given length of recoil and an assumed area of piston.

Comparison of the Pressures in the two cases, the Cylinders doing all the work in both cases.—With variable aperture and constant pressure,

$$P_1 = \frac{W'' V_0^2}{2gl}.$$

With a constant aperture and variable pressure, we have for the maximum pressure,

$$P_0 = \frac{\rho V_0^2 A^2}{2g u_0^2}.$$

When $n = 0$, as in this case, we have from (12)

$$x = \frac{1}{2m} \log_e \frac{V_0^2}{V^2}.$$

Now if we make $V = 0$, we shall have $x = l =$ infinity; but making $V =$ some small remaining velocity, V_1 say, and making $x = l$, we will have very nearly

$$m = \frac{1}{l} \log_e \log_e \frac{V_0}{V_1}.$$

But

$$m = \frac{\rho A^2}{2 W'' u_0^2},$$

Digitized by Google

and
$$\frac{1}{u_0^2}=\frac{2W''}{\rho A^2 l}\log_e\frac{V_0}{V_1},$$

hence
$$P_0=W''V_0^2\log_e\frac{V_0}{V_1}.$$

Therefore
$$\frac{P_0}{P_1}=2\log_e\frac{V_0}{V_1}.$$

For common logarithms,
$$\frac{P_0}{P_1}=\frac{2\log_{10}\frac{V_0}{V_1}}{\log_{10}\varepsilon}=4.6\log_{10}\frac{V_0}{V_1}.$$

If $\frac{V_0}{V_1}=10$, we have $\frac{P_0}{P_1}=4.6$;

" $\frac{V_0}{V_1}=9$, " $\frac{P_0}{P_1}=4.4$;

" $\frac{V_0}{V_1}=8$, " $\frac{P_0}{P_1}=4.2$.

Therefore the maximum pressure is about 4.6 times as great in a cylinder with a constant area of aperture as it would be in one with a variable aperture and constant resistance, the cylinders doing the whole work in both cases.

Recoil controlled by Compressed Air.—This is a very simple case, as we have
$$Pl=\frac{W''V_0^2}{2g}. \qquad (23)$$

Hence for any assumed length of recoil and given area of piston the pressure necessary to control the recoil may be computed. It is assumed that the pressure remains constant throughout the recoil, a condition evidently not true, since the recoil of the gun further compresses the air in the cylinder and increases the pressure; but the assumption is evidently on the safe side.

EXAMPLES.

1. What force or pressure must be applied to each of the four surfaces of friction in the compressor of the 8-inch M. L. R. "Wyoming's" carriage (Ericsson brake) to limit the recoil to 6 feet? the weight of the gun and top carriage being 20,800 pounds, the initial velocity of recoil being taken at 13.8 f. s., inclination of slide 4°, and coefficient of friction .2. *Ans.* 5812.9 pounds.

Digitized by Google

2. The 8-inch M. L. R. gun and hydraulic recoil carriage weighs 20,800 pounds, the initial velocity of recoil with a 35-pound charge is 13.8, the inclination of the slide being $7°$, $f = .2$, and the length of recoil 5 feet; what is the area of the aperture in the piston, the area being constant, and what is the maximum pressure in the cylinder? The effective area of the piston is 20 square inches, and $\rho = 62.5$ pounds.

Ans. $u_0 = 0.852$ square inch.
$P_0 = 707$ pounds per square inch.

3. With the data of Example 2, but with the initial velocity of recoil due to the 25-pound charge, or 11.4 f. s., find the area of aperture, and pressure for the same length of recoil, 5 feet.

Ans. $u_0 = 1.292$ square inches.
$P_0 = 210$ pounds per square inch.

4. If the recoil is limited to 4 feet, other conditions being the same as in Example 2, what is the area of aperture and the pressure?

Ans. $u_0 = 0.663$ square inch.
$P_0 = 1170$ pounds per square inch.

5. If the initial area of aperture for escape of liquid past the piston in the hydraulic recoil cylinder of the 6-inch B. L. R. is 2.645 inches, the pressure being maintained constant, and the whole recoil is 30 inches, what is the area of aperture when the gun has recoiled 20 inches; what is the pressure in the cylinder if the weight of gun and carriage is 11,500 pounds, initial velocity of recoil 18 f. s., and effective area of piston 30 square inches?

Ans. $u = 1.527$ square inches.
$P = 771.4$ pounds per square inch.

Digitized by Google

Digitized by Google

CHAPTER VI.

EXPLOSIVES.

Gunpowder is the explosive now in use for all gun and shell charges. In our navy, and in most foreign navies, gun-cotton is used in torpedoes. In our army, dynamite is used in torpedoes.

Gunpowder has been called the spirit of artillery, and very little reflection is necessary to convince one that good powder is of paramount importance to the good performance of the gun. The gunner desires that the pressure set up shall not endanger the gun, that the projectile shall have a high velocity, thus flattening the trajectory and promoting accuracy in this and in other ways, while he also requires that the gun shall not be too long nor too heavy. To reach these ends the powder-maker and designer of the gun must work together, availing themselves of all the light which science has thrown upon the subject.

General Discussion.—To fix the ideas, the problem may be stated thus: The diminution of the thickness of the walls of guns as we pass from breech to muzzle shows that the pressure of the powder gas upon the base of the projectile decreases towards the muzzle. Now, since the hoop tension at any point in the mass of a thick cylinder subjected to internal pressure diminishes as we pass outwards as the square of the radius, it follows that in order to get the greatest amount of work from a gun of given weight and length we must put the weight at as short a radius as possible. In other words, the gun must be a cylinder. The present form of guns is, then, a necessity arising from the condition of powder-making. If powder could be made to reach rapidly, but not so rapidly as to set up vibration in the walls of the gun, a given pressure; and to burn so as, notwithstanding the increase of space due to the motion of the projectile, to maintain a constant pressure on the base of the shot, we should get a greater muzzle energy of projectile per ton weight of gun than at present.

It follows also, from the law of diminution of the hoop tension, that a greater muzzle energy can be got from a long thin gun than from

Digitized by Google

one which is short and thick, the weights being the same. The available length is, however, limited.

The present aim of the powder manufacturer is therefore to make powder so that it will reach quickly the known pressure which guns of the proper thickness will withstand, and so that it will maintain this pressure as nearly as possible while the projectile moves out of the bore. It is apparent, therefore, that the powder should not flash off too quickly at first, and that it must burn with increasing rapidity after the shot begins to move.

Progressive Powders.—Such powder is called *progressive.* A glance at any gun will convince the observer that perfection is not yet by any means attained.

DEFINITIONS.

An explosion may be considered as the result of a chemical change in the solid or liquid body, by which is suddenly, or very rapidly, produced from it a great volume of highly expanded gas.

Explosives may be defined as a class of bodies the molecules of which are in such a state of unstable equilibrium that a slight disturbing agency will cause chemical change among them; the effect of which change is to produce suddenly a very large volume of highly expanded gas.

Explosive Effect.—*Explosive reaction* is the term applied to the chemical change which takes place in explosive bodies when their equilibrium is destroyed; while the blow or impulse given by the sudden production of the large volume of highly heated gas is termed *explosive effect.*

Explosive Compounds.—An explosive compound is a single definite chemical compound, the particles of which rearrange themselves to form the gases evolved by explosion.

The more important of the explosive compounds in extensive use for various purposes are:

Fulminate of Mercury,
Fulminate of Silver,
Nitro-glycerine,
Gun-cotton.

Explosive compounds are much more sudden and violent in their action than explosive *mixtures.*

Digitized by Google

Explosive Mixtures.—An explosive mixture consists of combustibles and supporters of combustion, mixed so that by their mutual action a large quantity of gas is developed. The most important explosive mixture is *gunpowder*.

The combustible bodies that may be used are very numerous, but practically there are only two bodies which are used to supply the oxygen necessary for burning the combustible. These are *potassium nitrate* or saltpetre, and *potassium chlorate*. Therefore all mixtures may be divided into two classes, namely, nitrate and chlorate mixtures.

Nitrate Mixtures.—The most important one under this head is that composed of saltpetre, sulphur, and charcoal. In various proportions this mixture is employed for very many purposes; the action is the same in all cases, so that the explosion of gunpowder fully illustrates them all. Nitrate mixtures are not greatly susceptible to friction, concussion, or percussion. In general, the explosion of these mixtures is comparatively slow.

Chlorate Mixtures.—In general, the explosion of these mixtures is much more sudden and violent than that of nitrate mixtures, and they are also much more sensitive to percussion, concussion, and friction. Generally speaking, all chlorate mixtures are unsafe, and dangerous to handle or transport on account of their susceptibility to accidental explosion.

As examples of this class may be mentioned potassium chlorate mixed with resin, galls, gambia, tan, etc.; such as Hosley's, Oriental, Erhardt's powders, etc.; with sugar, potassium ferrocyanide or ferricyanide, such as white or German gunpowder; with sulphur as used in explosive bullets.

A gaseous explosive mixture is nearly as sudden in its action as an explosive compound, for it contains particles in a state of perfect mixture, each gas acting as a vacuum to the others. This is not the case with *solid* explosive mixtures; therefore these latter are less sudden and violent in their action than either gaseous mixtures or explosive compounds.

Intensity of the Explosion.—Explosion may be of different degrees of intensity, from that where the body is converted into gas by gradual combustion, up to *detonation*, where the whole mass of the body is suddenly and violently converted into gas, as for example,

Digitized by Google

when gunpowder is ordinarily fired, each grain commences to burn on the surface, the burning gradually extending to the interior until the whole is consumed, while nitro-glycerine seems always to detonate, which partially accounts for its excessive violence.

Means of causing Explosion.—The application of heat either directly or indirectly, is the principal means of causing an explosion: directly, as by a match, a red-hot iron, etc.; indirectly, by friction, where the mechanical energy of rubbing is converted into heat; by percussion, where heat is generated by the direct application of a blow; or by concussion, where heat is generated by a jar or shock communicated *through* a second body.

Method of producing Explosion.—The circumstances under which an explosion takes place create a marked difference in the effect produced. Every one is familiar with the different effects produced by firing gunpowder in the open air and firing it in a confined space; but, apart from this, the *mode* by which it is fired exercises immense influences both upon the force and the rapidity of its explosion.

Suppose that a quantity of *fulminate of mercury* be exploded within a mass of any other explosive. Apart from the flame produced, a blow will be given by the gas suddenly formed by the fulminate, which will act upon the surrounding explosive *percussively*, like the blow of a hammer upon an anvil. The very rapid motion of the particles of gas will give them a force, as regards any resisting body, similar to that exercised by a solid having a great velocity, against any obstacle in its path.

Detonation.—When the flame of the fulminate is applied directly to the explosive, the chemical change is initiated at the point of application, and, if the flame alone were considered, would gradually spread from this point through the mass; but the percussive blow is extended through all parts of the body with very great rapidity, enormously expediting the speed of the explosive charge. In certain cases the effect is practically simultaneous throughout the whole mass of the body exploded, thus producing *detonation*, the effect of which is much more powerful than that of an ordinary explosion.

Explosives capable of Detonation.—Each explosive body that has been experimented with seems to have a particular mode of detonation, and probably all explosives may be detonated if the right method

Digitized by Google

of doing so be known. Gun-cotton seems to have a greater range of susceptibility to different modes of firing than any other explosive agent. It can be made to burn slowly without explosion, and the rapidity of its combustion can be increased up to the point of detonation. Nitro-glycerine, as before stated, appears always to detonate. (It is not sensitive to flame as directly applied.) Fulminate of mercury is a detonating substance, but the quantity of gas given off is comparatively small, hence the limited range of its destructive effect. Gunpowder is said to be capable of detonation, but it is more difficult to obtain detonating effects with it than with any of the others.

Detonation, how produced.—Detonation can only be produced by the application of the requisite blow or shock, and this is usually accomplished by means of a detonating fuze containing the required amount of fulminate of mercury, the amount differing for each explosive.

Fulminate of Mercury has been found to be by far the best agent for producing detonation; less of it is required than of any other explosive. Nitro-glycerine is much more powerful than fulminate of mercury, but while a certain amount of the latter will detonate gun-cotton, seventy times as much nitro-glycerine will not accomplish it. *Chloride of Nitrogen* and *Iodide of Nitrogen* are much more violent than fulminate of mercury, yet a larger quantity of them are required to produce detonation. These facts indicate that there is some peculiarity in the impulse given by the firing of fulminate of mercury that affects other explosives more powerfully than that given by any other body, though the latter may be the stronger. It may be considered that this is owing to a peculiarity of vibration, or *wave motion*, due to the explosion of fulminate of mercury, which causes greater disturbance among the molecules of other explosives than the vibrations produced by any other explosives.

Nature of Detonation.—Detonation is really only an exceedingly rapid explosion. In an ordinary explosion, like that of powder in a gun, much force is lost by the slowness of the action. As gases expand heat is absorbed, so that if the gases can expand as they are formed, much of the heat of the chemical reaction is absorbed, diminishing the sharpness of the explosive effect, which is therefore not sudden, but gradual. With a force gradually generated and exerted we have a propulsive effect, but a detonation has a disruptive violence, which may become almost irresistible.

Digitized by Google

Illustrations of Explosion by Detonation.—The practical value of this mode of developing the force of explosive agents is very great. The necessity of confining gunpowder and other explosive materials in strong receptacles for the purpose of developing their explosive force, is greatly reduced, and indeed entirely dispensed with in the case of charges fired under water, when detonating fuzes are used as the exploding agents.

Masses of hard material of great size or strength, such as blocks of hard rock, large iron castings, or thick bars of iron, may be broken up by simply placing upon one of their surfaces a comparatively small charge, quite unconfined, of compressed gun-cotton, or of a nitro-glycerine preparation, and exploding it by means of a detonating fuze.

In such operations the destructive effect of the detonation will be increased by covering the charge with sand or other material, but in hurried operations good results may be obtained with either of the materials specified, by detonating them when freely exposed to air.

For hasty demolition of buildings and of military works, the explosion by detonation affords most important facilities, reducing the difficulties, dangers, and cost of such operation to a minimum.

The phenomenon of explosion of gunpowder may be divided into three parts, viz. *ignition*, *inflammation*, and *combustion*. By ignition is understood the setting on fire of a particular part of the charge; by inflammation, the spread of ignition from grain to grain; and by combustion, the burning of each grain from its surface to centre.

Ignition.—Gunpowder may be ignited by the electric spark, by contact with an ignited body, or by a sudden heat of 572° F. A gradual heat decomposes powder without explosion, by subliming the sulphur. Flame will not ignite gunpowder unless it remains long enough in contact with the grains to heat them to redness. Thus the flame from burning paper may be touched to grains of powder without igniting them, owing to the slight intensity of the flame and the cooling effect of the grains. It may be ignited by friction, or a shock between two solid bodies, even when they are not very hard. Experiments show that gunpowder may be ignited by the shock of copper against copper, copper against iron, lead against lead, and even lead against wood; in handling gunpowder, therefore, violent shocks between all solid bodies should be avoided. The time necessary for igniting powder varies according to circumstances. For instance, damp powder requires a longer time than powder perfectly dry, owing to the loss of heat consequent on the evaporation of the water;

Digitized by Google

a powder the grain of which has an angular shape and rough surface will be more easily ignited than one of rounded shape and smooth surface; a light powder more easily than a dense one.

Inflammation.—When grains of powder are united to form a charge, and fire is communicated to one of them, the heated and expansive gases evolved insinuate themselves into the interstices of the charge, envelop the grains, and ignite them one after another.

This propagation of ignition is called *inflammation*, and its velocity, *the velocity of inflammation.* It is much greater than that of combustion, and it should not be confounded with it. When powder is burned in an open train, fine powder inflames more rapidly than coarse; such, however, is not the case in fire-arms, owing to the diminution of the interstices. If a charge were composed of mealed powder, the flame could no longer find its way through the interstices, and the velocity of inflammation and combustion would become the same.

Now, supposing one grain or particle alone be ignited, it will first be inflamed over its whole surface, and the progressive combustion will take place from the exterior to the interior. Its *rate of combustion* will therefore depend upon both its shape and size, leaving out entirely, for the present, the question of density and hardness. A particle of spherical or cubical form will expose less surface to ignition in proportion to its volume than one of an elongated or flat shape, and will consequently require a longer period for the combustion of its entire mass; the larger the particle, also, the longer will be the time required for its combustion.

Looking, then, at one grain of powder by itself, we may say that the larger it is, and the more nearly its form approaches a sphere, the longer will its combustion take and the slower will be the evolution of the gas. When, however, we come to regard the action of an aggregation of such particles, as in the charge of a gun, the *rate of ignition* of the whole charge is also affected by the size and shape of the grain.

The part of the charge first ignited is that near the vent, and the remainder is inflamed by contact with the heated gas generated by the combustion of this portion, so that the rate of ignition of the whole mass will be regulated by the greater or less facility with which the gas can penetrate throughout the charge, which is itself dependent upon the shape and size of the interstices between the grains. If the grains be spherical and regular in form, the interstices

Digitized by Google

will be comparatively large and uniform, and the gas will penetrate the mass with facility; again, the larger the grains, the larger the interstices between them. If, on the other hand, they be flat or flaky and irregular in shape, the passage of the gas will be more difficult, and the rate of inflammation of the charge reduced.

We see, therefore, that the considerations which affect the more or less rapid combustion of an individual grain of gunpowder, also affect the rate of ignition of a charge of such grains, but in an opposite direction; so that a form of grain which will individually burn rapidly, may offer an increased resistance to the passage of the heated gas through the charge, and thereby retard its ignition, while a grain which will burn more slowly may allow of the charge being more rapidly ignited.

By varying the size and shape of the grain alone, a powder may therefore be obtained, a charge of which shall be ignited rapidly throughout, but burn comparatively slowly, or one which shall be ignited more slowly, but when once inflamed burn very rapidly. It is necessary to draw a clear distinction between a rapidly igniting and a quickly burning powder.

Ratio of the Charge.—The heat developed increases with the charge, and as the velocity of the gases increases with their temperature, it is therefore evident that a large charge is consumed quicker than a small one; it is also true that the loss of heat absorbed by the surface of the bore is much less sensible when the charge is great than when it is small, that is, the quantity absorbed is proportional to the surface, or the square of the calibre of the gun, and the heat developed increases as the cube of the calibre.

The Resistance to be overcome.—When the projectile offers a great resistance it is not so quickly displaced as when the resistance is slight; its motion in the first instance is then less rapid, and it evidently follows that the inflammation takes place in a space more confined as the resistance to be overcome is greater. The smaller this space is, the more heat is concentrated, the higher the temperature of the gases is raised, and consequently their velocity is increased; the inflamed gases have a less distance to expand through, and there follows from all these causes a train of effects which accelerates the inflammation of the charge.

The Place where the Fire is communicated to the Charge.—When a quantity of powder is contained in an enclosed space, all the

Digitized by Google

sides of which offer an equal resistance, it is evident that the complete inflammation will be the quickest possible when the fire is applied to the centre of the charge.

In cannon, however, the force developed does not meet with the same resistance in all directions; the projectile yields as soon as sufficient force acts upon it; and as the combustion of the powder requires a definite interval of time, it follows that a great part of the charge is not consumed until after the displacement of the projectile.

Now, the position of the interior orifice of the vent may influence the time required to displace the projectile, and this influences the inflammation of the charge. For example, with the regulation vent, it is the upper part of the charge which first takes fire; the inflammation is communicated to the adjacent parts and promptly reaches the projectile; the gases expanding displace it, and the inflammation takes place in a larger space than that at first occupied by the charge.

The glazing of the grains facilitates the rapid transmission of the flame through the mass.

Combustion.—The velocity of combustion is the space passed over by the surface of combustion in a second of time, measured in a direction perpendicular to this surface. The diameter of the grains in "cannon powder" does not exceed 0.15 inch; the time required for combustion of such grains, therefore, is altogether too transient to be ascertained by direct observation.

The velocity of combustion may be determined by compressing the powder composition into a tube and burning it, or by burning the *press-cake*. In the latter case take a prism of the cake of convenient length and about one inch square at the base, smear the sides with hog's lard and place it on end in a shallow dish of water. The object of the lard is to prevent the spread of the flame to the sides, and the water is to prevent the lower end from being ignited by burning drops of powder. Set the upper end on fire and note the time of burning of the column with a stop-watch beating tenths of seconds.

In either way it will be shown that the composition, if homogeneous, burns in parallel layers, and that the velocity of combustion is uninfluenced by the size of the columns or by the temperature and pressure of the surrounding gas.

Now take a spherical grain of powder of homogeneous structure, and so hard pressed that the gas cannot penetrate it. Apply fire to any part of its surface; the flame will immediately envelop it and

Digitized by Google

burn away the first spherical layer; the radii of the grain undergoing equal reductions in equal successive portions of time. Then at the end of half the time required for the total combustion of the whole grain, there will remain unconsumed a sphere of which the radius is one-half the original radius, but the volume will be only one-eighth the original volume (spheres being to each other as the cubes of their radii). At this epoch, therefore, seven-eighths of the grain will have been consumed.

It will be seen from this, that for equal intervals of time, those taken in the first period of combustion give forth very much larger amounts of gas than those taken in the last, and that with a charge of such grains the gas is evolved in the inverse order desired; the evolution being greatest while the velocity of the projectile is least, and least while that velocity is the greatest, thus giving rise to excessive pressure at and near the seat of the charge. This may be remedied in some degree by increasing the size of the grain, the effect of which will be to diminish the amount of gas evolved in the first instant of time, and thereby diminish the pressure in the gun.

It may be shown by direct experiment that the burning of a grain of powder in a fire-arm is progressive, and that the size of the grain exerts a great influence on the velocity of the projectile. For instance, if *one* piece of the *press-cake* was placed in a small mortar and fired, little or no motion would be given to the projectile. If this piece be divided into seven or eight parts, the projectile will be thrown a short distance, and by increasing the number of the parts or grains, so will the effect of the powder on the projectile also increase.

The progressive burning of powder is further confirmed by the fact, that burning grains are sometimes projected from the gun with sufficient force to perforate screens of paper and wood at considerable distance. It is even found that they are set on fire in the gun and afterward extinguished in the air before they are completely consumed. The large grains of powder used in the fifteen-inch gun are sometimes thrown out burning to a distance of one hundred yards.

The Velocity of Combustion varies with the purity, proportions, trituration, density, and condition of the ingredients, also with the pressure under which the powder is burned.

Purity of Ingredients.—To secure the greatest velocity of combustion, it is necessary that the nitre and sulphur should be pure or nearly so.

This can always be effected by a proper attention to the prescribed

Digitized by Google

modes of refining; but with charcoal it is different, for the part which it plays in combustion depends upon certain characteristics which are indicated by its color and texture. The velocity of combustion will be greater for red charcoal than for that which is black and strongly calcined; and for light and friable charcoal, than that which is hard and compact.

Proportions.—By varying the proportions the velocity of combustion is varied.

The increase of sulphur tends to make a more violent explosion and a more quickly kindling mixture, as the sulphur is the kindling ingredient. Too much charcoal causes too slow burning. The diminution of the sulphur or nitre checks the rapidity of combustion, but may be made up by using more inflammable charcoal. The quality of the charcoal is powerfully affected by the temperature at which it is made. That made at a low temperature, or red charcoal, contains more hydrogen and less carbon, is more inflammable and burns more rapidly, but, from its smaller proportion of carbon, must be used in greater quantity. It may be said that the charcoal is the varying ingredient; so that the proportions used at any time will depend upon the *quality* of the charcoal. In all naval powder great care is taken to get a uniform quality of black coal, giving the nearest attainable approach to pure carbon.

Trituration.—Gunpowder, unlike nitro-glycerine, fulminate of mercury, and other detonating substances, is not a chemical compound, but only a mechanical mixture. By the incorporating process during manufacture the three substances of which powder is composed are so intimately mingled that the eye cannot detect the presence of any particular one. They are, notwithstanding, only mixed, and the saltpetre can be readily dissolved out by water, or the sulphur sublimed in the form of a vapor, by the application of a moderate heat, leaving in either case the other two ingredients chemically unchanged. The more intimate the mixture the more nearly does gunpowder approach to a chemical compound, and the more violent is its combustion; but there always must remain a vast difference between the most complete mechanical mixture and the most unstable chemical compound. For this reason the combustion of gunpowder is only very rapidly progressive and not instantaneous, as is the case with the violent explosives mentioned above. It is this difference that renders gunpowder so valuable as a propelling agent, for were it not for its

Digitized by Google

comparatively mild action, no gun could be made sufficiently strong to resist its force. The material of the cannon would be broken before the inertia of the projectile could be overcome.

Density.—The density and hardness of the grains of powder are of quite as vital importance as their size and form, in determining the rate of ignition and combustion of a charge.

By density is meant the quantity of powder actually present in a given bulk.

It is important that this quality should not be confounded with hardness. A substance may be very hard and yet be of a low density. A powder with a very hard surface may be really less dense than another the surface of which is softer. Of course, very high density cannot be communicated without producing a considerable degree of hardness; but powder can be made hard without rendering it very dense, by pressing the dust in a comparatively dry state.

Hardness seems to bear a direct relation to the power exerted in compressing, while density does not. Powder dust, at a high degree of moisture, say 6 per cent, can be made very dense by application of moderate pressure, while that of 1 per cent can only be brought to the same point in density by the exertion of enormous force. Of the two, the latter will be the harder powder.

Explosive Force.—By using a slower burning powder less heat and pressure are evolved at first, and, the waste of heat in the stage of initial pressure being less, more heat remains for expansive action. Hence the slower burning powder is weaker at first, but stronger afterwards; and although the total quantity of gas be only the same, and the pressure not so great at any point, yet the aggregate pressure throughout the bore may equal that of the more energetic and more dangerous powders.

The question of the instantaneous explosion of gunpowder is one of extreme importance, for, independently of the increase of the actual amount of pressure which it would cause in a gun, this pressure when suddenly applied will have twice the destructive effect that the same pressure would have if slowly applied.

The objects to be attained in regulating the size and density of the grains are the greatest possible velocity of projectile combined with the least strain on the gun. These cannot be obtained by one set of conditions for all natures of ordnance. A small projectile moves quickly and relieves the strain in a still greater ratio. A heavy

Digitized by Google

projectile not only moves slowly, but even a considerable motion does not relieve the strain in a proportionate manner, because the column of powder is larger in a large gun than in a small gun. With small arms, consequently, we must use fine-grain powder, but large-grain powder with heavy guns.

Owing to the effect which heat and pressure have in accelerating combustion, the size and density of grain that will suit any particular gun, and as a consequence the actual pressure in the gun itself, can only be determined practically.

The explosive force of gunpowder may be calculated from the products of combustion, on the assumption that certain laws hold good, such as that the tension of a gas varies with its density and also with its temperature. It must, however, be remembered that these laws have been verified only within certain limits of pressure and temperature; and therefore, when we come to such very great pressures and temperatures as are met with in the explosion of powder, any conclusions founded on them must be received with caution, until the results have been confirmed by experiment.

It is of little practical utility to attempt to determine the exact value of the explosive force of gunpowder, for the nature of the action in charges of equal weights will vary considerably, not only from atmospheric causes, or in consequence of imperfections in the manufacture or in the qualities of the ingredients, but with the *size*, *form*, and *density* of the grains and the *form* of the cartridge.

Recent Publications.—The best recent treatment of gunpowder and its explosion will be found in an article by M. Debus, *Proceedings of the U. S. Naval Institute*, No. 23; Noble and Abel's *Researches on Fired Gunpowder*, Proceedings of the Royal Society; in Sarrau's *Researches on the Effects of Powder in Guns;* and in the writings of Berthelot.

Tests of Ingredients used in the Manufacture of Gunpowder.—The ingredients, nitre, sulphur, and charcoal, having been prepared, it is usual to subject the first to the following tests:

1. With blue and red litmus paper, for the presence of an acid or alkali.

2. With a solution of nitrate of silver, for the presence of chlorides, which would throw down the insoluble chloride of silver.

3. With a solution of chloride of barium, for the presence of sulphates, which would give the insoluble sulphate of baryta.

Digitized by Google

4. With a little oxalate of ammonia, for lime, which would give oxalate of lime.

In the ordinary practice of refinery, the second test, viz. that for chlorides, more especially the chloride of sodium, is the only one ever used.

The sulphur is tested:

1st. By burning a small quantity on porcelain, when the amount of residuum should not exceed 0.25 per cent.

2d. By boiling with water and testing with blue litmus paper, which it should only very feebly redden.

As an ingredient of gunpowder, sulphur is valuable on account of the low temperature (560° F.) at which it inflames, thus facilitating the ignition of the powder. Its oxidation by saltpetre appears also to be attended with the production of a higher temperature than is obtained with charcoal, which would have the effect of accelerating the combustion, and of increasing by expansion the volume of gas evolved.

In the preparation of charcoal, it is of the highest importance that the charring of the wood should always be conducted as nearly as possible at the same temperature; for the chemical composition of the charcoal and the temperature at which it will ignite are undoubtedly affected by the temperature at which it has been charred. Charcoal prepared at a low temperature is softer, more inflammable, and contains more gaseous elements than charcoal prepared at a higher heat; and the gunpowders made from these charcoals would be similarly affected. It is hopeless, therefore, to attempt to obtain uniform results in manufacturing powder, unless means be taken to insure uniformity in the preparation of charcoal. The fitness of charcoal for gunpowder depends on its chemical composition, which is indicated by its physical qualities. If properly made it should be jet-black in color, its fracture should show a clear, velvet-like surface, and it should be light and sonorous when dropped on a hard surface.

Underburnt charcoal, that is, charcoal that is prepared at a very low temperature, is at once known by its reddish brown color; overburnt charcoal, by its hardness and density. The former is greatly more inflammable than the latter, charcoal prepared at a temperature of 500° F. being readily ignited at a temperature of 640° F., while charcoal prepared at 1800° F. requires a temperature nearly double the last to inflame it. Underburnt charcoal has found favor for some small-arm powders. It certainly appears to render the powder more

Digitized by Google

inflammable, and consequently quicker, but it has the disadvantage of being more hygroscopic than denser charcoal, and of rendering the powder therefore more liable to suffer damage from damp. That underburnt charcoal produces a very marked effect on gunpowder there can be no doubt. Recent experiments have proved that if two powders be made identical in all other qualities, the one with black charcoal, the other with red or underburnt charcoal, the latter will give a higher velocity to the projectile than the former. Powder made from underburnt charcoal can be readily distinguished, when crushed to fine dust, by its color.

Proportions of Ingredients.—In determining the proportions in which the constituents should be mixed, the circumstances in which it is to be used must be considered.

The theoretical percentage composition is generally thus:

Nitre,	74.8
Sulphur,	11.9
Charcoal,	13.3

The percentage of nitre varies from 70 to 80; that of sulphur and charcoal from 10 to 15 each.

The best powder is intended for war and sporting purposes, and contains usually a little less sulphur and a little more charcoal than the above.

The Proportions required by regulation for Black Gunpowder in the United States service are:

Nitre,	75
Charcoal,	15
Sulphur,	10

These proportions are not those which theoretically would give the greatest amount of gas. The charcoal is in excess, to allow for ash, and the sulphur is diminished, as it acts injuriously on the metal of the piece by the formation of a sulphide of iron, which eats away the surface of the bore.

When the proportion of charcoal is greater than that contained in common powder it will be less completely and rapidly burned.

Blasting Powder, for example, contains a greater proportion of charcoal and less nitre; its action is consequently slower, and if used in fire-arms, not only is the piece very soon rendered foul, but the

Digitized by Google

ball is projected to a much less distance. This alteration in the proportions is mainly on account of the great reduction in price thereby effected.

Preparing and Mixing the Ingredients.—Before the ingredients can be mixed they must be reduced to a powder sufficiently fine for the purpose. It is important to bear clearly in mind the meaning of the terms *mixing* and *incorporating*, as they are used by gunpowder makers. Though gunpowder is really only a mixture, very intimate, no doubt, of the three ingredients, and not a new chemical substance formed out of them, yet by mixing is understood only the stirring together for a few minutes of the saltpetre, sulphur, and charcoal, to get them perfectly distributed amongst each other; and by incorporating, the long-continued trituration and grinding which the mixture undergoes under heavy edge-runners, by which a mass of the ingredients becomes transformed from a mere mixture of three different substances into gunpowder. A preliminary mixing, such as is employed at most gunpowder works, *may* be dispensed with; incorporation, whether performed by pestle and mortar, in the stamping mill, or under edge-runners, never.

The Saltpetre.—If the saltpetre is used moist, an allowance for this must be made in weighing. The percentage of moisture in the quantity used is ascertained by drying and pressing a sample, and comparing the weight before and after the operation. In this country it is found highly advantageous to have the saltpetre dried and pulverized before weighing out.

Occasionally, dried, refined saltpetre may be employed for manufacture in the case of a stoppage in the saltpetre refinery. In this case the dried salt is first ground under a pair of small stone edge-runners, fitted with scrapers to prevent the salt adhering to them, and then passed through a slope reel covered with 28-mesh wire, that which passes through the wire being used for mixing, the larger fragments being reground.

The Sulphur is ground in quantities of 2½ cwts. at a time, under a pair of iron edge-runners, also fitted with scrapers, and sifted into a slope reel covered with 32-mesh wire.

The Charcoal, after being carefully hand-picked, to guard against the introduction of any fragments of foreign matter and underburnt knots of wood, is ground in a mill resembling a coffee mill in action.

Digitized by Google

It consists of a cone working in a cylinder, each being furnished with diagonal ribs, or teeth, which are widely apart at top, but approach closely together at bottom. The charcoal, which is shot in at the top, passes out at the bottom into a slope reel covered with 32-mesh wire, all fragments which do not pass through being transferred again to the mill.

An important caution must be mentioned in connection with the grinding of charcoal. After being burnt it should be allowed to stand for a considerable time—ten days to a fortnight—before being ground; for when ground fresh after burning, the finely powdered charcoal absorbs and condenses oxygen so rapidly as to generate a great amount of heat; enough, in so bad a conductor, to cause spontaneous combustion. Instances of fires in gunpowder factories from this cause are on record, fresh-ground charcoal having been left overnight in wooden bins.

Further Operations.—After the relative proportions of the three ingredients have been weighed out, usually for a 50-pound mixture, they are transferred to the mixing machine; after being thoroughly mixed they are taken thence to the incorporating mill. The incorporation is the most important of all the processes; it is the long-continued grinding together of the ingredients, and must be most thoroughly done, as upon the thorough and effectual incorporation which it receives depends mainly the excellence of the powder. After incorporation, the mill cake, as it is called, goes to the press, and leaves it in the form of press cake, in case granulated powder is to be obtained; or, in case the grain is to be of special form, the mill cake goes to presses which have plates so shaped as to press the cake into grains of the particular and regular shape desired. If the powder is to be granulated or irregular in form, the press cake is broken up by being run through a granulating machine provided with toothed rollers.

Powder in the form of irregular grains is then run through the dusting reel, and if it is to be glazed, is transferred to the glazing barrels, which consist of large, strong wooden barrels supported on an iron shaft. By revolution of the barrels the grains rub against each other and the surfaces of the grains become polished. After a second dusting process the grains are dried in a drying room and are then ready for use.

The following are some of the shapes which are given to powder grains:

Digitized by Google

Special Forms.—The larger-grained powders used in heavy guns are usually pressed in molds of some special form. The following are some of the most widely used:

Pierced Prismatic Powder, or perforated cake powder. This is ordinary powder made in the form of regular hexagonal prisms about one inch thick and 0.8 inch in the side, perforated with one hole about ½ inch in diameter.

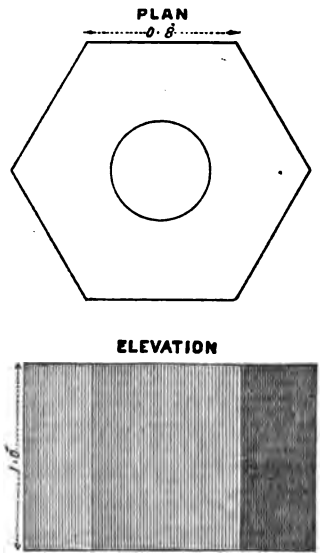

The cakes are formed by placing mealed powder, moistened sufficiently with water, in a mold of the proper form, and subjecting it to the required pressure.

In making up charges of this powder the prisms are built up regularly in the cartridge bags, which are then tightly tied at the mouth, so that the grains are kept in place. These perforations thus form long tubes through the charge, by which the gas permeates the whole mass.

This powder, originally from the United States, has been introduced into the German, Russian, and Austrian services, and finds many advocates elsewhere. This form of powder is based on the theory that the grains, being ignited through the perforations, burn outwardly, producing a progressively increasing surface of ignition, thereby evolving greater volumes of gas as the velocity of the projectile is increased and the space through which the gas develops is augmented. This is the form of grain of the cocoa powders made in Germany and by Dupont.

Hexagonal Powder.—This powder is about 0.7 inch in diameter, and made by Dupont & Co. It has lately been introduced, and has given very good results. The granulation is very uniform. It is called "Hexagonal" by the manufacturers, probably because it is nearly so in cross section.

Pebble Powder.—So called from its resemblance to small black pebbles. This is an English powder, similar to our

Digitized by Google

Mammoth powder. It consists of irregular cubes, having edges from five-eighths to four-eighths inch in length, made by cutting up the press cake into the required form.

Pellet Powder.—This is an English term applied to a large-grained powder. The pieces of the Pellet powder are all of uniform size and cylindrical shape, about one-half inch long and three-quarter inch diameter, with a perforation at one end to give greater igniting surface.

Rifle Large Grain Powder, or "R. L. G." powder, is an English service powder, in grains which pass through a sieve of four meshes, but are retained in one of eight meshes to the inch.

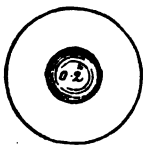

Machines for making Special Powders.—The fundamental parts of every machine for making this class of powder are: 1st, a mold in which to place the powder meal; 2d, a punch accurately fitting the mold, with which to compress the powder; 3d, some appliance for pressing the finished pellets out of the molds.

Sphero-Hexagonal Powder.—This powder is of the form of two hemispheres joined by a very short hexagonal zone. The zone has been reduced in thickness very much, so that the powder is nearly spherical in form. This powder has given excellent ballistic results in the steel guns recently made for the navy. It is highly progressive in nature; and this result, to which the spherical form is opposed, seems to be attained by large variations in specific gravity —the centre being much lower than the exterior—to which, on the other hand, the spherical form is favorable. This powder is used for the charges of R. F. guns.

It is usual to partly define powders of special form by stating that they run so many grains to the pound; for example, the sphero-hexagonal powder at one time used in the VI-inch gun was 123 grains to the pound. If the form of the grain, the number of grains to the pound, and its specific gravity are stated, we evidently know all about it.

Cocoa Powder is now in almost universal use for the charges of heavy guns. It is made by two firms in Germany and by Dupont, and the details of its manufacture are secret. It is found to consist of about 81 per cent of nitre, 4 of sulphur, and 15 of charcoal. The charcoal is probably prepared at a lower temperature than is

Digitized by Google

ordinary, otherwise the manufacture is probably the same. This of itself would cause the powder to be more violent in its action, and this effect is doubtless diminished by the small proportion of sulphur present. It seems not unlikely, from its composition, that this powder may light less quickly than black powder, and may burn with greater quickness afterwards. Larger charges of it than of black powder can generally be used, and the pressures are lower and the velocities as high or higher in almost all cases. This powder is also called brown powder and sometimes chocolate powder, from its chocolate-brown color. Dupont's cocoa powder is a little darker in color than the German powder.

Another well known powder is the Italian Progressive or Fossano powder. It is made of grain powder of various sizes, from 0.1 to 0.6 inch, and "farina" or meal powder, mixed in proportions of 1 and 2 of grain to 1 of meal. This mixture is pressed into cakes of various thicknesses, and broken up into irregular grains of a cubical form of from 1 to 2 inches on the side (the pressure reduces the mass to about two-thirds its thickness, or say 1.75 specific gravity). The irregular grains and cubes make up the charge.

Numerous as have been the attempts to apply other explosive agents as substitutes for gunpowder in fire-arms, no rival of the latter has established any good claims to success, except for sporting purposes.

The various fulminating substances known to chemists are unfit for use in fire-arms, owing to a variety of circumstances; one of which is the extreme rapidity of their explosion, the whole mass appearing to be converted into gas at once. The action of fulminates is also too local; if a portion of any of the more violently explosive substances be fired on a piece of metal, the latter will be perforated or depressed exactly at the spot occupied by the substance; and if it be attempted to use it to charge fire-arms they will be destroyed, yet in all probability the ball not projected; moreover, these substances are not serviceable for charging shells, because the latter, instead of being blown into pieces of moderate size capable of inflicting great damage, become converted into fragments so small as to be far less destructive.

A new powder used in France with small arms is said to be made of different ingredients than gunpowder, giving high ballistic results and almost no smoke. Its manufacture is a secret.

Digitized by Google

But, although gunpowder is still the only propelling agent susceptible of general application, it no longer enjoys a monopoly in connection with some equally important applications to naval, military, and industrial purposes, such as blasting, demolition of walls, buildings, or wrecks, and destruction of vessels by torpedoes.

Gun-cotton.*—This is obtained by the action of concentrated nitric acid on cotton. Cotton is nearly pure cellulose, which is the principal part of the ligneous fibre or woody matter of plants. Cotton, linen, and hemp fabrics and unsized white paper are nearly pure cellulose.

When cellulose, cotton wool for instance, is acted upon by a strong mixture of nitric and sulphuric acids, its external appearance remains unchanged, but its chemical composition is very much altered, *pyroxyline* being formed. This is a nitro-substitution product; a certain number of equivalents of hydrogen being abstracted from the cellulose, and their place supplied by an equal number of equivalents of nitryl.

There are a number of these substitution products in which the substitution is more or less complete, and they differ more or less in their properties.

The pyroxyline used to make collodion is a mixture of several of the lower ones. The lower products decompose more readily than the higher ones, and at a lower temperature they are more prone to spontaneous decomposition and more inflammable and will explode, but with less violence than the higher ones.

The term *gun-cotton* should be restricted to the highest one of the products; and in making it the substitution must be carried as far as possible, so that none of the lower and less stable compounds may be obtained mixed with the higher ones. The cotton used must be perfectly dry, and free from grease or other impurities. Only the very strongest nitric acid must be used, and the treatment must be prolonged until the conversion has become complete. The gun-cotton must be finally freed from every particle of acid.

Manufacture.—The various details connected with the manufacture of gun-cotton are frequently changing, and therefore only a general description of the mode of preparation will be given.

Purification of the Cotton.—Long staple raw cotton of the finest quality is the best to use. It is first cleaned, and then washed

* Hill.

Digitized by Google

in an alkaline solution to get rid of all oily matters, which would otherwise prevent the complete saturation of the cotton by the acids used in its preparation. After being purified it must be again thoroughly washed, and then dried before going through the subsequent operations.

Treatment with Acid.—The perfectly dry cotton is converted into gun-cotton by immersion in a mixture of strong nitric and sulphuric acids, in the proportion by weight of one part of nitric to three parts of sulphuric acid.

The sulphuric acid does not act at all in forming the gun-cotton, but only takes up the water that is formed during the process, thus preserving the strength of the nitric acid. The nitric acid is of the strength not less than specific gravity 1.50. The sulphuric acid is the ordinary oil of vitriol, specific gravity 1.83.

The cotton is first dipped in this mixture, and exposed to its action for a few moments. It is then taken out, and as much as possible of the acid that has been taken up removed by pressure. It is then put in fresh acid, where it remains 48 hours. The vessels are kept cool during this time by a stream of cold water. In the first acid the cotton is nearly all converted, but it is a matter of the greatest importance that the conversion should be complete. It is therefore necessary that the second and prolonged operation should be made.

To Remove the Acid.—To remove all the acid from the gun-cotton thus made, it is placed in a centrifugal drying machine, and then thoroughly steeped for a considerable time in running water, and subsequently dried.

It is finally treated with an alkaline solution, as carbonate of soda, and again washed, thoroughly dried, and packed.

Abel's Method.—In the manufacture of gun-cotton there is great difficulty in thoroughly washing the cotton, because the long, hollow fibres get twisted and bent, so that it is very hard to free them from the acid. Abel has instituted the pulping process, by which the cotton is so torn as to be easily washed; and instead of raw cotton of high quality and long staple, any description of cotton can be employed; and the waste cuttings from spinning machines, such as are used for cleaning machinery, are more suitable than cotton in any other form. The pure, fine pulp is pressed into compact masses while wet.

Digitized by Google

Pulping.—The cotton, after being washed and strained, is carried to a long tube, or *beater*, filled with water, in which a wheel revolves, armed on its periphery with steel cutters. From the bottom of the tub under the wheel extend similar projections of steel, and as the motion of the wheel carries the cotton around, all parts are driven through the contracted space between the cutters, thus reducing the whole to a pulp. From the beater the entire contents is run into a *poacher*, or large tub in which a paddle-wheel revolves; the object being to continue the washing of the cotton, after being reduced to pulp, so as to secure the perfect cleansing of the material. All parts of the pulp are carried over and over by the wheel, and this operation is continued several hours. The operations of the preparation of the cotton are now complete, and it only remains to drain off the water and press the pulp into the required shape.

Compressing.—In order to drain off the water, the first operation is to draw off the pulp and water from the poacher to a large iron cylinder, or *stuff-chest*, where it is agitated by paddle-wheels. From the bottom of the stuff-chest there runs a pipe to lead the pulp to the press for forming the cakes.

This press is a circular machine consisting of a shelf having thirty-six circular perforations about two and a half inches in diameter, which have cylindrical continuations extending about one foot below. Beneath these hollow cylinders are a corresponding number of solid cylinders fitted so as to enter them, which are attached to a plate that is actuated from below by a hydraulic force. The solid cylinders being entered into their corresponding hollow ones, the pulp is allowed to run in through a movable trough and fill the recesses. The upper orifices are now covered with a weight, the solid cylinders forced up and the pulp compressed, the water being allowed to escape through strainers or perforations in the pressing cylinders.

The cylinders of gun-cotton thus formed are removed to a second press having only four cylindrical recesses, in each of which are placed three of the cylinders, separated from one another by disks of iron having scored edges to allow the escape of water. The operation is repeated, the pressure being six tons to the square inch. This press produces cylinders about three inches in length by two and one-half inches in diameter, and weighing one-half pound; about six per cent of moisture being still retained. Square shapes are now used for the charges of gun-cotton spar torpedoes.

Digitized by Google

General Properties.—Gun-cotton is entirely insoluble and unaffected by water, so it may remain in it any length of time without injury. Its permanency has been a matter of doubt, and for this reason the more extended use of gun-cotton has been greatly hindered. Of course, if it is liable to spontaneous decomposition, it cannot be used with any degree of confidence, but the late improvements in its manufacture seem to give a very stable and safe product. If so regarded, it possesses many advantages over gunpowder, as follows: Less danger in making; unaffected by moisture, or even immersion in water; easier transportation; it leaves no residue and makes no smoke.

Forms in which Gun-cotton is used.—It can be worked into many forms for different uses. The process of manufacture when not pulped leaves it in the loose state, resembling ordinary cotton. It can then be run into threads and ropes, and the threads into webs or hollow cylinders. For ordnance purposes it is made into disks from the pulp, or the yarn is wound on a hollow tube or core. Besides this, the compact masses pressed from pulp can, while still moist, be cut, sawed, or drilled into any shape, granulated, or mixed with other bodies.

Potassium nitrate or chlorate is usually mixed with the pulped article. Abel has proposed a mixture called *glyoxiline*, composed of compressed nitrated gun-cotton saturated with nitro-glycerine.

Uses of Gun-cotton.—It is much used for mining purposes and submarine explosions, since it is more readily handled than gunpowder, is not injured by water, and less is required to do the same work. Compressed gun-cotton is much used for torpedoes and large engineering operations, for which it presents very great advantages. It is very effective when great destructive effects are to be produced very quickly, as blowing up bridges and military works. For instance, to destroy a bridge it is only necessary to place upon it a charge of gun-cotton and fire it with a detonating fuze. In the same way large quantities of rock may be broken up and guns may be disabled.

Mode of Firing.—Dry gun-cotton when unconfined flashes off without explosion; when ignited, therefore, to obtain its force it must be confined in strong vessels, so that the gases first generated will be driven through the whole mass, enveloping every particle with flame before the case is ruptured. Under these circumstances great explosive effects may be obtained. The explosion is very much influenced

Digitized by Google

by the manner in which it is effected. It can be readily detonated, and then it is unnecessary to have it strongly confined. The more powerfully it is compressed the more readily it can be detonated, since the particles are less able to move on one another, and therefore offer a greater resistance, causing more rapid evolution of heat.

Compressed gun-cotton can be fired while moist, or even when saturated with water, by exploding in it a disk of the dry, by means of a fulminate fuze. When dry and unconfined, if ignited by a flame, it burns steadily and quietly until consumed; but if fired by a detonator, it explodes violently.

Nitro-glycerine.—This is a nitro-substitution product of glycerine; it is a violently explosive substance produced by the action of nitric acid on *glycerine.*

Its formation resembles that of gun-cotton, three equivalents of hydrogen being removed from the glycerine by the nitric acid, and three equivalents of nitryl introduced in their place.

Glycerine is the sweet principle of oils and fats. It is a sweet, viscid, colorless liquid, soluble in water and alcohol in all proportions. In this country it is principally derived from the fats of hogs. That of commerce contains more or less water and is slightly colored. Sometimes it also contains small quantities of fatty acids. This is a very dangerous impurity, if it is to be used in making nitro-glycerine, and must be guarded against.

Method of Manufacture.—It is produced by the action of strong nitric acid on glycerine at a low temperature.

As in making gun-cotton, the nitric acid is mixed with a large proportion of strong sulphuric acid—one part of the former to two parts of the latter by weight—which acts in taking up the water that results from the reaction, and so keeps the nitric acid at its full strength.

Glycerine is mixed slowly with the acid mixture, which is constantly agitated during the operation, and great pains are taken to keep down the temperature. When all the glycerine has been added, the mixture composed of nitro-glycerine and the remaining acid is poured in a thin stream into a large volume of water, where the nitro-glycerine is precipitated as a white, opaque, heavy oil. When it has subsided the water may be poured off. It must be thoroughly washed, as too much stress cannot be laid upon the

Digitized by Google

importance of a complete removal of the acid from the nitro-glycerine.

After some time, depending on the temperature, the white, opaque, thick fluid changes to a clear, pale amber, somewhat thinner liquid, and then should be entirely free from acid. If so, it will remain unaltered, not becoming acid again.

Converting glycerine into nitro-glycerine must be carefully and properly conducted, if good results are to be obtained. It must be carried on at as low a temperature as possible, and a great rise of temperature must be prevented during the operation. The glycerine must be free from dangerous impurities.

The strongest nitric acid must be used; if weak acid is used, the quality of the product may greatly vary.

General Properties.—Nitro-glycerine is more violent in its explosive effects than gun-cotton, more nearly resembling the fulminates, though not so easily exploded. When not pure, it undergoes spontaneous decomposition with evolution of nitrous fumes, frequently causing explosions; but when well purified, it may be kept for a long time without alteration.

It is unaffected by and does not mix with water, so that it can be exploded when in direct contact with it. It is a light yellow, oily liquid, has a faint, peculiar smell, and a sweet, pungent aromatic taste. A drop of it is said to cause very violent headache, and in large doses it appears to be decidedly poisonous.

Mode of Firing.—To explode nitro-glycerine it is necessary to use what is technically called a *strong exploder*, that is, one that in itself gives a strong blow or shock. Therefore, fulminate of mercury is generally employed for that purpose. Nitro-glycerine explodes only locally by percussion. If placed upon an anvil and struck with a hammer, the particles receiving the blow detonate, not exploding, but scattering the rest of it. It is not exploded by friction or concussion in the ordinary sense of the words, that is, by an ordinary or reasonable friction or concussion. Simple application of flame will not fire it, though, of course, it may be heated to explosion; but it is not sensitive, that is, not easily exploded by slight causes, therefore an ordinary fuze or slow match is useless.

However exploded, it seems always to be instantaneous through the whole mass. When fulminate is used, this is evidently by direct detonation; in other cases, probably by initial detonation of a small

Digitized by Google

particle. It is more easily detonated than any other body, and less fulminate is required. It can readily be fired by this means, when unconfined; but as is always the case, greater effects are obtained if it is confined, however slightly. It is with the greatest difficulty that it is fired when frozen; therefore it is used in the liquid state.

Transportation.—It is usually kept in cans and frozen for transportation or preservation, and must be melted before it is used. It solidifies at 40° Fahr., which can readily be accomplished by keeping it in melting ice a sufficient time. It freezes to a nearly pure white crystalline mass. When frozen, it can be melted by means of hot water not above 90° to 100° Fahr.

Stability or Permanence.—The history of nitro-glycerine closely resembles that of gun-cotton. The manufacture has been carried on before it had been properly studied or its characteristics known. As to its stability, the little exact knowledge obtained of it has caused the opinion to be formed that it is very unstable. Even yet we have very little precise knowledge of it, but it is believed that its permanency depends upon its purity, and that if pure and well made it is sufficiently stable, provided proper care is taken of it. As an explosive it is so valuable that it would still be used even were it much more dangerous.

Uses of Nitro-glycerine.—It has generally been used for submarine and other blasting. For heavy work it surpasses any other agent; being so much more powerful than gunpowder, less is required and less drilling is necessary. It is a powerful shattering agent and breaks up the rocks finely. It leaves no residue and gives no smoke. It is well adapted to many kinds of submarine work; good results are obtained by placing it on the surface of rocks under water, the latter acting as a *tamping*.

Compounds of Nitro-glycerine.—The successful application of the remarkable explosive liquid, *nitro-glycerine*, has been developed chiefly in the last few years, and the existence of several most serious obstacles to its use in the pure liquid condition has been practically demonstrated; in several instances, indeed, by most disastrous accidents; therefore many attempts have been made to devise some method of promoting safety, and also certainty of action in its employment.

These ends have been attained to a great extent by mixing nitro-glycerine with some solid substance of perfectly inert nature and of

Digitized by Google

absorbent character, through the medium of which the liquid is susceptible of employment in a condition assimilating to that of other explosive agents in practical use.

Dynamite.—This is the name given to a compound of nitro-glycerine formed by absorbing it in a light silicious earth, which may be mixed with about three times its weight of nitro-glycerine without becoming more than moist to the touch, and is therefore readily susceptible of manipulation as a solid material. This mixture is as readily susceptible of explosion through the initiative agency of a detonating fuze as nitro-glycerine itself, and though it obviously cannot be so powerful an explosive agent as that substance when successfully applied in its undiluted state, its destructive powers are still greatly in excess of those of gunpowder.

The Uses of Dynamite.—Dynamite is applicable to all the uses for which nitro-glycerine is employed. When properly applied it does not need confinement for the development of its explosive forces, and it is especially applicable for military purposes.

It is by far the best of the nitro-glycerine mixtures, and is probably the best form for its use in torpedoes.

Certain defects are inherent in the material, such as its losing its susceptibility to detonation by the ordinary means at a low temperature,* and the tendency of the nitro-glycerine to partial separation from the silicious earth during transport and storage; but in balancing its advantages against those of other explosive agents, the special defects of these have also to be taken into account, so that, provided the uniform stability of the material becomes established, and the apprehensions as to its comparatively dangerous character, to which certain accidents have given rise, are allayed by further experience in its storage and use, and, possibly, by improvements in its manufacture, a high position may be assigned to dynamite among the most useful explosive agents of the present time. It is the best of all the nitro-glycerine preparations. In commerce different grades of dynamite are distinguished from each other by the percentage of nitro-glycerine by weight to the whole mixture.

Lithofracteur.—Several other methods of applying nitro-glycerine as a destructive agent have been brought forward. Among these is the substance to which the inventor has given the name *lithofrac-*

* If finely divided it may be exploded when frozen; but this fact is practically of little value.

Digitized by Google

teur, and which contains, in addition to nitro-glycerine and an absorbing medium of the description used in dynamite, some proportion of other explosive materials, such, for example, as the constituents of gunpowder. This substance is of a plastic and almost pasty nature, and is employed in the form of rolls made up in paper.

Lithofracteur may be considered a dynamite to which has been added about twenty per cent of bad gunpowder containing an enormous excess of carbon. The addition of the constituents of gunpowder lowers its firing point, which is of doubtful advantage, and makes it more liable to be injured by moisture. Its force must be less than dynamite, for it depends on the amount of nitro-glycerine in it; no additional force being derived from the other ingredients.

Dualine.—Sawdust and similar absorbent materials have also been used as vehicles for the application of nitro-glycerine, under the name of *dualine*.

This mixture also contains about twenty per cent of saltpetre. It, however, owes its explosive qualities to the nitro-glycerine, and the only thing in its favor is that it is not liquid. In other respects there are serious objections to it. The slight absorbent power of the sawdust makes the amount of nitro-glycerine taken up comparatively small, while holding feebly what is absorbed. The mixture of nitre and wood makes dualine more sensitive to flame or blows, and lowers the firing point. It contains less nitro-glycerine than dynamite, and hence is weaker. It is much lighter than dynamite, and for equal volumes has much less force. It has an excess of carbon from the wood, so that great amounts of that deleterious gas, carbonic oxide, are formed, diminishing the force of the reaction.

Fulminates.—Fulminate is the general name for a class of explosive bodies which are compounds of fulminic acid with a base. They are all more or less explosive by the action of heat or friction; of these the fulminates of mercury and silver are the most important.

Fulminate of Mercury is prepared by dissolving one part of the mercury in twelve of nitric acid, sp. gr. 1.42, aided by a gentle heat. As soon as the mercury is dissolved, add eleven parts of alcohol, sp. gr. 0.87. A brisk action will ensue, and the solution will become turbid from the separation of crystals of the fulminate. Dense, white clouds are also evolved at the same time. When the action has subsided the vessel may be filled with water and the fulminate allowed to settle, after which it is collected on a filter, washed, and dried by

Digitized by Google

exposure to the air. When dry it must be handled cautiously, as it explodes by friction or percussion, especially when in contact with particles of sand or glass. It is also exploded by heating to about 300°, by the electric spark, and by contact with concentrated nitric acid or sulphuric acid.

When wet it will not explode. Its explosive force is not much greater than that of gunpowder, but it is much more sudden in its action.

The readiness with which it is fired makes it an excellent agent for exploding other substances, and this gives it its value. It is used in percussion caps, primers, and fuzes—not pure, but mixed with nitre, mealed powder, and other substances, because it is necessary to moderate its explosive property, since it is otherwise too rapid and violent for the purpose. It is sometimes mixed with chlorate or nitrate of potash, and ground glass is often added to increase the sensibility of the mixture to explosion by percussion.

Fulminate of Silver is prepared by a process similar to that for fulminate of mercury, but as its explosive qualities are far more violent it is advisable to prepare it only in minute quantities. When dry it must be handled with the greatest caution. Nothing harder than paper should be used in manipulating it, or for wrappers. It is exploded in the same way as fulminate of mercury, but is of no practical value on account of its sensitiveness.

Picric Acid and Picrates, Picric Powder.—Picric, or tri-nitrophenic acid, is another nitro-substitution compound. It is formed by the action of nitric acid upon phenol, or phenylic alcohol, better known as carbolic acid. It is used as a dye-stuff. It has but feeble explosive properties, yet many of its salts are highly explosive.

Potassium picrate is so very sensitive to friction or percussion as to be practically useless.

Abel's picric powder is a mixture of ammonium picrate with saltpetre. It is very little affected by blows or friction, possesses considerably more explosive force than gunpowder, and can be worked in a moist state like ordinary powder. It is said to be useful for torpedoes.

Explosive Gelatine.—Explosive gelatine, or gelatine dynamite, is made by dissolving photographic gun-cotton in nitro-glycerine, or by mixing nitro-glycerine with collodion, removing the solvent by evaporation. Nitro-glycerine, with the aid of heat, dissolves soluble

Digitized by Google

gun-cotton, forming a gelatinous mass of firmness varying with the amount of gun-cotton contained. At 160°–170° F. solution of the gun-cotton and gelatinization quickly take place. In explosive gelatine the nitro-glycerine is very strongly retained, not being given up under heat or pressure. Explosive gelatine is very insensitive to blows and is not easily exploded, requiring a very powerful fuze, and is not injured by water. Various substances may be mixed with the materials used in preparing this agent to form mixtures of different kinds. Camphor dissolves freely in nitro-glycerine, so that camphorated explosive gelatine can easily be made containing it in any proportions. This preparation is more insensitive to blows or other mechanical action than the simple gelatine. When struck by a rifle bullet fired at a distance of 80 feet it does not explode. To determine its explosion, either strong confinement or a peculiarly powerful fuze is required. In many respects explosive gelatine (particularly the camphorated variety) has special advantages for military purposes. It is considerably stronger than dynamite (75 per cent) or compressed gun-cotton; and it is very free from liability to accident or injury in use or transportation. On the other hand its stability is a matter of question. Instances of its decomposition on keeping, or after long exposure to moderate temperatures, have been observed. It is probable that this difficulty may be removed. Soluble gun-cotton is apt to contain traces of free acid and to vary greatly in composition. Special care must be taken in making the gun-cotton to ensure uniformity and complete purification. If this tendency is overcome it is probable that explosive gelatine may be valuable for military purposes.

Digitized by Google

Digitized by Google

CHAPTER VII.

AMMUNITION.

In this chapter only the ammunition for rifle guns will be considered. The subject will be treated under the following named heads: **Projectiles; Fuzes; Charges and means of igniting the same; Fixed Ammunition.**

PROJECTILES.

Kinds in Use.—The projectiles used in rifle guns are shot, shell, and shrapnel. Rifled canister has been devised for use in B. L. R. guns. The shell are of two kinds, battering and ordinary. Battering shell are cast or forged with a solid head, and having no fuze, the ignition of the bursting charge depends upon the heat formed upon impact or in the penetration of armor. The ordinary shell are fitted with a fuze in the head or base, and filled with a bursting charge sufficiently large to break the shell into fragments.

The materials used in the fabrication of rifle projectiles are cast iron and steel.

Cast iron is used for common or ordinary shell, but the tendency to break up in the gun, owing to the high pressure on the base, has led to inquiry of steel manufacturers as to the practicability of casting steel sheel. Forged steel shell have been made, but the process of forging and boring out is too expensive for the common shell, of which large numbers are used. It is believed that it will be soon possible to make cast-steel shell cheaply.

If cast iron is used it should be of the best quality, that the shell may not break up under the high pressure in the gun, which will also govern the thickness of metal at the base and in the walls of the shell.

The intensity of pressure at any transverse section into which an elongated rifle projectile may be conceived to be divided, is evidently variable, while its motion is accelerated in the bore of a gun. Denoting its value per unit cross section by p, we have

$$p = \frac{am}{A},$$

Digitized by Google

where a is the acceleration of the section considered, A its area, and m the mass in front of it. Since the acceleration of all points in the projectile, for practical purposes, may be taken to be the same at any instant, and since m is greatest at the base of the shot, we would, if A were equal at all points, expect to find the shell broken at its base, if anywhere. From the greater value of A here, and from the stiffening effect of the base upon the walls, it is evident that the point which needs strengthening is a little in advance of the base. Strengthening by increasing the thickness of the walls here has, however, the disadvantage of throwing the centre of gravity back.

Against wrought iron or the earlier and inferior grades of compound armor the chilled cast-iron shell was used. But as compound armor improved in character, and as steel armor came into common use, in combination with high velocities, cast iron has been abandoned for armor-piercing shells, and the present steel battering shell has been universally substituted. The development of the steel battering shell is only just begun, and yet the results obtained are surprisingly good. (See chapter on Penetration of Projectiles.)

Battering or Armor-Piercing Shells for B. L. R. guns are made of forged or rolled tempered steel. The temper is not too strong, and the projectiles are subjected to further treatment in order to produce a material that will not easily break up on impact. A new process of rolling steel projectiles has been adopted extensively abroad. The steel projectiles for rapid-firing guns are so made in this country. The process of rolling produces an exceedingly tough steel, and the effect on the projectile by impact with iron armor is almost nothing, the shape being retained almost perfectly. The cavity for the bursting charge of the armor-piercing shell is bored out.

Tempering Steel Forged Shell.—The following is the plan adopted for tempering the steel battering shell by the works at St. Chamond, France.

They are first heated to a cherry red throughout, then plunged in oil and kept immersed until cold. Secondly, they are again heated to a cherry red, and are hung with the head as far as the front band (the steadying band) in cold water, kept so for 8 to 10 minutes, and then wholly immersed in oil until cold. The effect of the first tempering is evidently to produce a high elastic and tensile strength and to obtain toughness throughout. The second sudden cooling of the head in cold water renders that part of the projectile extremely hard,

Digitized by Google

so hard, in fact, that it cannot be touched by a file. This method produces a projectile that will hold together, and nearly all the energy will be expended on the plate.

Casting Shell.—In casting both solid and hollow projectiles the mold has always been placed head down, in order that the denser metal shall be where more desirable, in the head, but in the latest castings at the Washington Navy Yard this has been reversed. This departure was taken to obtain sufficient density of metal in the base of the shell to withstand the high pressure in a modern B. L. R. The molds are of iron lined with sand, with a core of sand formed on a hollow iron spindle for shell. The mold for casting chilled-headed shot by the Palliser method is in two parts (see Fig. 1), that for the body being of sand, while that for the head is of iron, in order that it may be subjected to the chill. By this means the head of the projectile is suddenly cooled and hardened from the exterior.

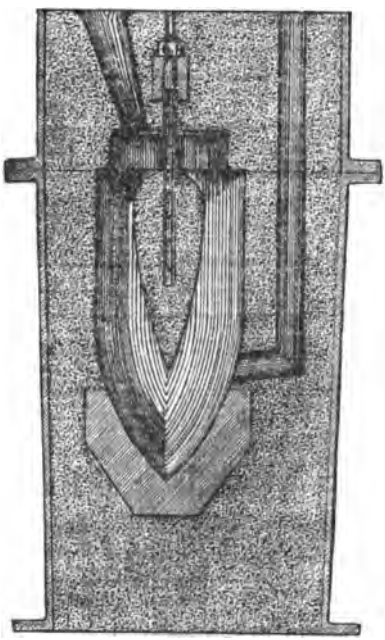

FIG. 1.

A model of similar design is used in casting the common shell.

Digitized by Google

The Rotating Band.—With regard to the character of the rotating bands on rifled projectiles, there may be said to be three general systems of imparting rotation to rifled projectiles. These are the *expansive system*, used with muzzle or breech loaders; the *compressive* or *forcing system*, used with breech-loaders only; and the *studded system* (used abroad), which is principally confined to muzzle-loaders. The bands are made of brass, copper, or composition.

The Expansive System.—With this system the band is attached to the base of the projectile, and is provided with a circular lip or flange which, by the pressure of the gas, is expanded out into the grooves of the rifling.

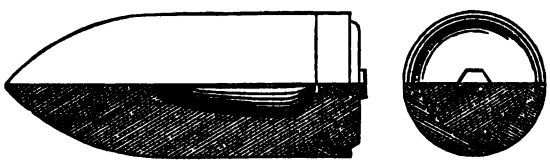

FIG. 2.

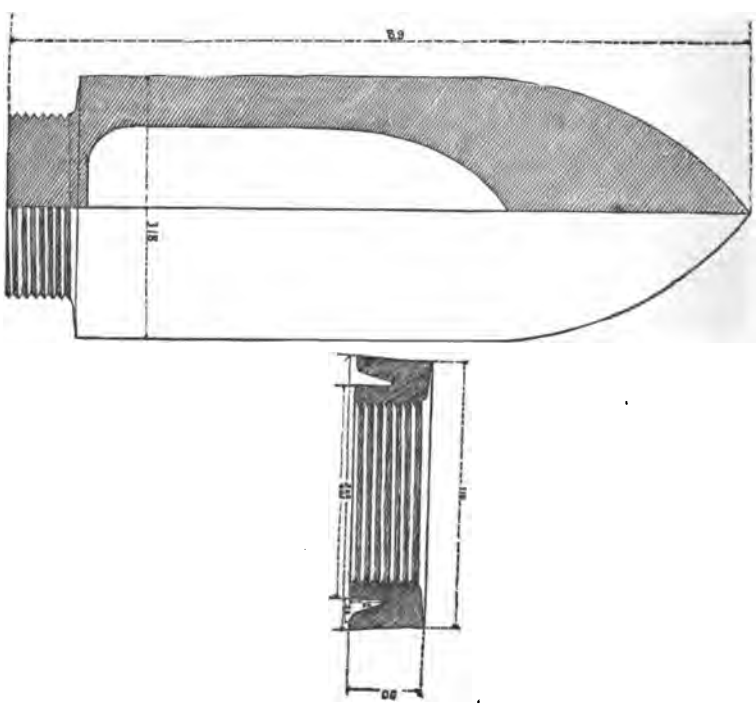

FIG 3.

Digitized by Google

Examples.—The best examples of the expansive system are the Parrott band (Fig. 2) and the Butler band (Fig. 3). The former is used with Parrott projectiles, and the latter with the projectiles for 8-inch M. L. R. (converted). The Parrott band is of brass, cast into a rabbet formed on the base of the projectile. To prevent the band from slipping and thus failing to impart rotation required to the projectile, a number of projections parallel to its length are left on it.

The figure shows half elevation and half section of the projectile fitted with a Parrott band. A narrow groove or cannelure is left between the band and edge of the base of the projectile, to obtain greater certainty of action.

The Butler band is a double-lipped annular band of a composition of copper and zinc, screwed to the rear part of the body of the projectile.

A brass pin is inserted at the junction of band and side of the projectile to prevent slipping. The powder gas enters the groove between the lips, forcing the outer one into the grooves of the gun.

The Compressive System.—In this case the projectiles are fitted with a band of soft metal a short distance from the base of the projectile, the diameter of the band being a little greater than the calibre of the gun. On firing, the band is forced or compressed into the grooves.

This system is the best for B. L. guns, and has been adopted for U. S. Naval B. L. R.'s. A soft lead band is used with the 3-inch B. L. R. projectiles, see Fig. 4. The shape of the band for other projectiles is shown in Fig. 5.

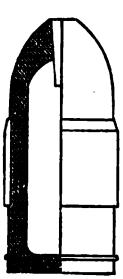

FIG. 4.
3-inch B. L. R. Shell.

FIG. 5.

Digitized by Google

It is a composition band of irregular shape, the interior length being slightly greater than the exterior, while the exterior faces vary in size, the front face or slope being longer than that at the rear.

The Studded System.—This system comprises all projectiles which have projections on their cylindrical portion calculated to take the grooves of the rifling on firing. It has never been used in the U. S. Navy.

The Whitworth system of imparting rotation is peculiar to none of the three mentioned. The bore of a Whitworth gun is in the form of a hexagonal spiral with rounded corners. The projectiles are six sided and made to fit the bore rather loosely. A gas check follows the projectile.

The Shape of the Head.—The shape of the heads of all B. L. R. common shell, for the heavy steel guns, is that of an ogival, the radius of the head being two calibres. For 8-inch M. L. R. shell, 180 pounds, the radius of the head is 1½ calibres. The Parrott projectiles are also ogival headed, radius of head one calibre. The head

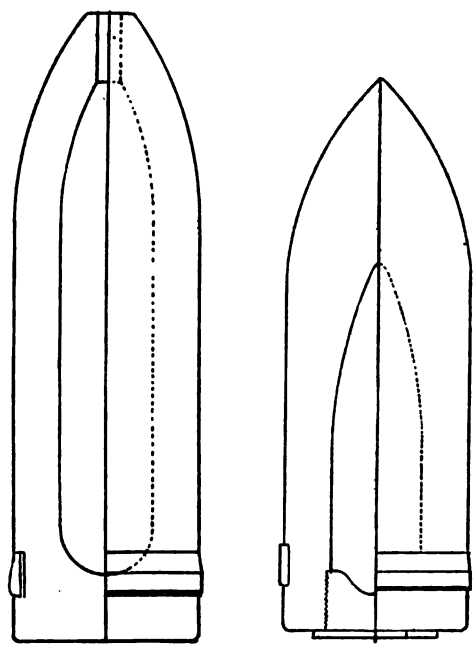

FIG. 7.

Digitized by Google

Digitized by Google

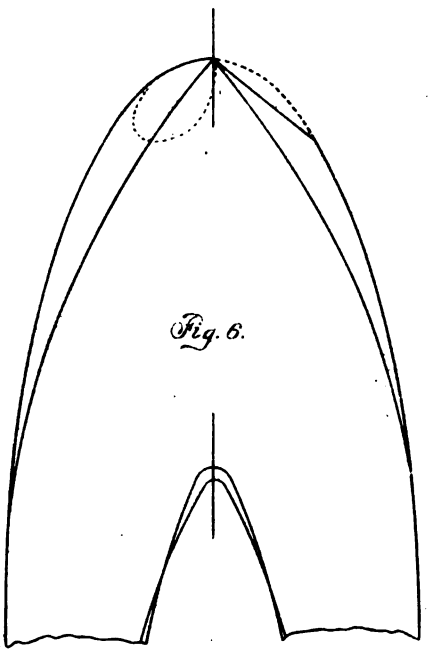

Blunt Tri-faced and Ogival heads compared

Digitized by Google

of the 3-inch B. L. R. projectile is an ogival of 1½ calibres radius, while the radius of the ogival in the case of the steel shells for the rapid-firing guns is three calibres. The armor-piercing shells have heads which are a modification of the ogival of two calibres radius. The curve starts out with a radius greater than two calibres and becomes almost hemispherical at the point. The point is formed by planing off the metal on three sides, forming what is now known as the blunt trifaced armor-piercing projectile. A comparison of the ogival of two calibres radius and the trifaced pointed head is made in Fig. 6, the outside lines belonging to the trifaced projectile.

The general forms of the common and battering shells for all B. L. R. heavy steel guns is shown in Fig. 7.

The relative dimensions for these two kinds of shell for the same gun may be observed in the figure.

The forms of rifled shrapnel and canister for B. L. R. steel guns are shown in Fig. 8.

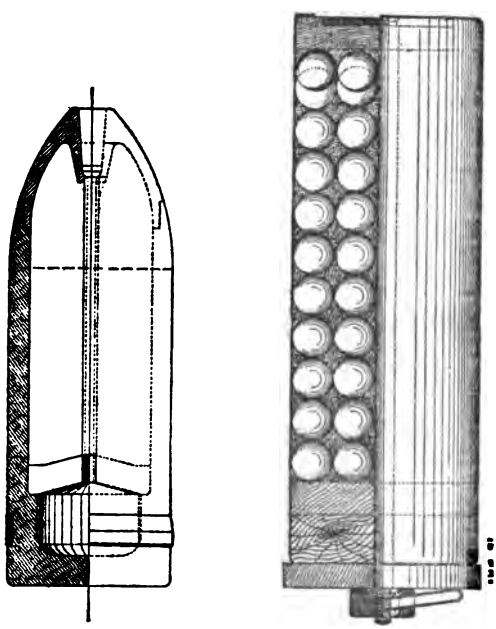

FIG. 8.

The Bursting Charges for Shells.—For weights of bursting charges see Table of Elements for Naval Guns, 1886, Chap. II.

Digitized by Google

Gunpowder is generally used for bursting charges. Experiments have recently been made which show the possibility of using wet gun-cotton, of a certain degree of moisture, with a suitable fuze, with perfect safety and with reasonable certainty of action, as the bursting charges of shells. There are several plans in vogue for using dynamite as the explosive charge in shells; at the present time its use is attended with some uncertainty. Since the explosive force of gun-cotton as compared to nitro-glycerine is as 3 to 4.5, and in the case of 75 per cent dynamite as 3 to 3.3, it would seem that gun-cotton is a more desirable high explosive than dynamite for shells.

The Inspecting Instruments for rifle shell consist of templates, ring gauges, a cylinder gauge, fuze gauge, searcher, hammer, and calipers for the side, base, and interior. The calipers for the interior measurements alone need present attention. This instrument consists of two parallel arms formed by a continuous steel strap. One arm is terminated by a curved point, and is graduated into inches and quarters, from the end towards the centre; the other arm carries a socket at right angles to its length, through which slides a graduating measuring rod. The zero of the scale corresponds to the position of the rod when it is in contact with the curved point, and a vernier scale on the socket permits measurements to .01″.

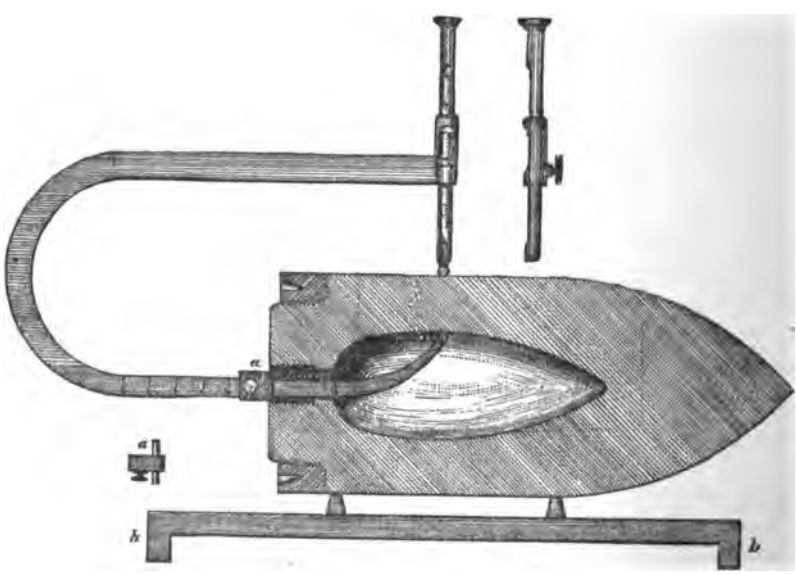

FIG. 9.

Digitized by Google

To find the centre of gravity of an ogival-headed projectile.—The surface of the head may be generated by the revolution of a circular arc about its chord; the surface so generated being cut in halves by a plane at right angles to the chord. Take the axis of x as the geometrical axis of the ogival and the origin in the plane of its base, as indicated in the figure; let a be the radius of the projectile, and na the radius with which the ogival is struck. Then we have for the equation of the generating curve,

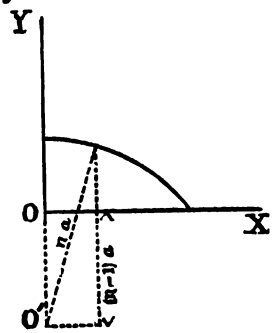

$$x^2 + [y + (n-1)a]^2 = n^2a^2,$$

whence $$y = \sqrt{n^2a^2 - x^2} - (n-1)a.$$

Thus if $\bar{x}$ be the abscissa of the centre of gravity of the ogival head, we have

$$\bar{x} = \frac{\int^{a\sqrt{2n-1}} y^2 x dx}{\int_0^{a\sqrt{2n-1}} y^2 dx}.$$

If the cylindrical body and head be solid, the centre of gravity of the whole projectile is easily found by addition. And in any case, unless the form, either internal or external, be very irregular, we may proceed as indicated. In the case of a spheroidal head, we have $a^2y^2 + b^2x^2 = a^2b^2$ as the equation of the generating curve; and, in the case of a parabolic head, taking the origin of axes at the point, $y^2 = 4ax$.

To find the moment of inertia (I) of projectiles of various forms; γ in all cases denotes the mass of unit volume.

For a solid sphere, of radius a, revolving about line OX in figure, we have:

$$I = \gamma \int_0^a 2x \,.\, 2\pi y \,.\, y^2 dy, \text{ and } x = \sqrt{a^2 - y^2},$$

whence $$I = \gamma \,.\, \frac{8\pi a^5}{15}.$$

And, for hollow sphere, of radii b and a,

$$I = \gamma \,.\, \frac{8\pi (a^5 - b^5)}{15}.$$

Digitized by Google

For a solid cylinder, we have similarly

$$I = l\gamma \int_0^a 2\pi r^3 dr = \gamma \cdot \frac{\pi l a^4}{2},$$

where l is the length of the cylinder parallel to OX.

And, for a hollow cylinder, of radii b and a,

$$I = \gamma \cdot \frac{\pi l (a^4 - b^4)}{2}.$$

For the ogival in the figure, about OX, we have, since the radius of gyration of a circle of radius y is $\frac{y^2}{2}$,

$$I = \gamma \int_0^{a\sqrt{2n-1}} \frac{y^2}{2} \cdot \pi y^2 \cdot dx = \gamma \cdot \frac{\pi}{2} \int_0^{a\sqrt{2n-1}} y^4 \cdot dx;$$

whence, since we know the equation of the generating curve, we can in all cases find I.

It is thus apparent that we may, in all cases, unless the form of a projectile be very irregular, determine its moment of inertia.

Fuzes.—A percussion fuze, or a combination time and percussion fuze, in which latter the fuze is lighted by the shock of discharge, are the only classes which have been successfully used with large calibre rifled shell.

The Percussion Fuze used with U. S. B. L. R. is the Schenkle, and is described in p. 149, Ord. Instructions, 1880. The combination time and percussion fuze has not at this time been tried in this country.

The fuzes for R. F. gun ammunition are described in the chapter on Rapid-firing Guns.

The invention of a reliable base time fuze would seem most desirable.

Charges and the means of igniting the same.—The charges for all guns except R. F. and machine guns are put up in cartridge bags which are of the same form approximately as the powder chamber in which they are placed.

Pierced prismatic powder being used for the 5-inch and heavier calibres of steel guns, the grains are stacked up in the cartridge bags in such a manner that the axial holes in the grains of the several layers are coincident. The charges for the 8-inch B. L. R. and heavier calibres weighing 125 pounds and upward, are put up in two cartridge bags, half in each. (For weights of charges see Table of

Digitized by Google

Elements for Naval Guns, Chapter II.) Each full charge is kept in a copper cartridge cylinder just large enough to contain one full cartridge. The copper cylinder has a removable cap at each end which fits the cylinder snugly and goes over the end of the cylinder as far as a shoulder on the latter will allow. When the charge is in the cylinder the caps are put on and stout cartridge paper is pasted around the cylinder and the edge of the cap, with a string in a score underneath. The strength of the paper is sufficient to allow the cylinder to be lifted by the handles at the ends without pulling off the caps. The powder is stored in the magazines in these cylinders without tanks, and the charges go to the guns in the same condition as they were in the magazine. On arrival at the gun, by the aid of the string the paper is torn off at one end and the cap from that end removed. The open end being placed in the screw box, the cap is taken off the other end, and the rammer forces the cartridge home in the chamber. The cylinders are thus a valuable aid in loading.

The Primers used in service are percussion, friction, and electric primers (see Ord. Inst. 1880, pp. 359–62). The percussion primers for the steel B. L. guns are of the form shown in Fig. 10. It

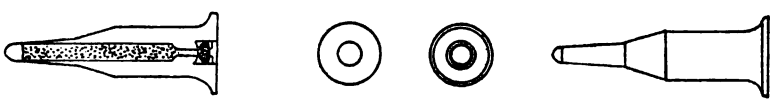

FIG. 10. Percussion.

consists of a steel case containing a charge of powder and a bullet of .22-inch calibre. The primer is held firmly in the firing attachment by a steel block carrying a firing pin, which rolls into place in rear of the primer. All escape of gas from the vent is effectually sealed.

Fixed Ammunition.—This has already been defined in chapter on R. F. guns, where also the ammunition for those guns is described. The ammunition for small arms and Gatlings is fixed ammunition. The cartridge case is of drawn brass, with a central fire primer at the end. The bullet is lead, of .45-inch calibre, and is crimped firmly in the front end of the cartridge case. Steel bullets, and lead bullets with steel outside casing, have given excellent results with high-power small arms. The tendency at the present time is to reduce the calibre of small arms, use steel bullets, and a high ratio of weight of charge to weight of bullet. Thus the number of rounds a soldier can

Digitized by Google

carry is very much increased, while the increased accuracy, range, and penetration are very important improvements.

The ammunition for the Hotchkiss revolving cannon consists of the shell with its bursting charge and fuze, the powder charge, the lubricator, and the case containing them.

The Nose Fuze consists of a metal body, A, closed at the front end with a screw cap, B; it has a conical hole at the rear, which is closed with a lead plug, C (the safety plug), pressed in very tightly, so that the plug projects a little through the base of the body case, toward the inside.

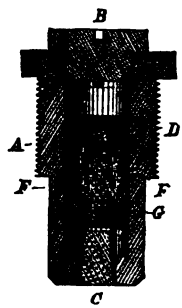

FIG. 11.

The plunger D is composed of lead cast into a brass casing to strengthen it and to prevent the lead being upset by the shock of discharge. Two brass wires, F, cast into the lead on opposite sides of the plunger, hold it suspended in the case, the wires going through the holes in the bottom of the case, and being held securely in position by the safety plug. The plunger has a nipple cast into the lead and is primed with an ordinary percussion cap; in its axis it has a powder chamber, G, containing the igniting charge.

The operation of the fuze is thus: The safety plug is dislodged backward into the interior of the projectile by the shock of discharge; the wires then being not held tight in the hole, the plunger is disengaged and rests on the bottom of the fuze case, and is free to move in the line of axis. When the flight of the projectile is suddenly retarded by its striking any object, the plunger, in consequence of its inertia, is driven forward, and the primer strikes against the screw cap, thus igniting the powder in the channel and so firing the bursting charge of the projectile.

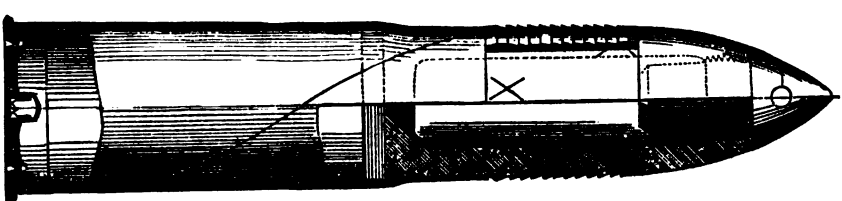
FIG. 12.

The lubricator consists of a felt wad dipped in a solution of tallow and beeswax.

Digitized by Google

CHAPTER VIII.

ARMOR.

Upon the metal, its thickness and quality, and the method of placing it, depends primarily the value of the armor to the vessel protected by it.

Metals Used for Armor.—The different metals used for armor plates are, in the order of date of use, wrought iron, a compound of steel and iron, and steel. Wrought iron, the first used, is cheaper than steel or any combination of steel and iron, but having been proved to be weaker than steel or a combination of steel and iron, is no longer used by itself.

Kinds of Armor.—There are, then, two kinds of armor: *compound armor*, consisting of a wrought-iron plate faced with steel, the relative thickness of iron and steel being as 2 to 1, or 5 to 3, about; and *steel armor*, in which the plate is all steel.

Compound Armor.—There are two methods for the manufacture of compound armor which have been extensively used; a third method has recently been introduced. The older methods are known as the Wilson and Ellis patents, the former being used by Cammell & Co. of Sheffield, England, and the latter by Brown & Co., also of Sheffield. The third method has been patented by Mr. Alexander Wilson, of the firm of Cammell & Co. The plates made by these processes are known as Cammell or Brown plates, as the case may be.

The Wilson Process No. 1.*—"Under this Wilson patent (Cammell), the iron backing plate is first manufactured in the ordinary way. It is then placed in a special furnace and raised to a welding heat, and while in this condition, without being lifted from the furnace, molten steel, manufactured in this instance by the Siemens-Martin process, is poured on the plate to the requisite thickness. The steel has a much higher temperature than the iron, and the excessive heat carburizes the iron surface to a depth of from one-eighth to three-sixteenths of an inch, thus forming a zone of mild steel between the hard steel and the iron, while at the same time the connection between the

* Proceedings Naval Institute, Vol. IX, Part II, page 574.

Digitized by Google

steel and iron is something more than the ordinary weld. After running the steel, the plate is removed from the furnace and put through finishing rolls to insure thorough welding. The steel face is then tempered and partially re-annealed to remove the internal strain.

"A slight modification of the above method is said to have produced excellent results, in that the iron plate was placed on end in the furnace, the steel being run in alongside, thus gaining the additional factor of closeness of structure due to the additional weight forcing the gases out of the metal. It will be seen that the furnace is a mold for the plate."

The Ellis Process.*—"Under the Ellis patent (Brown), the iron backing is manufactured as before, and a hard steel plate is also made separately. The iron plate is then put in a furnace similar to the Cammell one, and iron bars are placed around its edges, forming a berm. The hard steel plate is also put in the furnace and all are raised to a welding heat together; the steel plate which forms the face of the complete plate is then laid over the berm of the iron one, and molten steel (Bessemer) of a medium softness is run between. The same welding action takes place as before, and the same system of rolling, tempering, and annealing is followed."

The Wilson Process No. 2.—Under Wilson's second patent, the firm of Cammell & Co. have recently (1887) made compound armor plates which show extraordinary resistance. The process is as follows. To make a 20-inch compound plate, for example:

A wrought-iron fibrous plate about 15 inches thick is built up from a number of thinner plates, and while hot from the forging process, is placed into an iron box or mold of proper dimensions; in this case the depth of the mold is about 28 inches. Upon one face of the wrought-iron plate is run a layer of very mild steel or "ingot iron," about 13 inches thick; the plate is then taken from the mold, reheated, and subjected to hammering or rolling until reduced in thickness to about 18 inches. This combination forms the backing of the compound plate. It is again put into the mold, and on the original exposed face of the wrought-iron plate is run a layer of hard steel about 8 inches thick. The plate in the rough is now about 26 inches thick. It is again taken from the mold, reheated and rolled, hammered or pressed to the desired thickness of 20 inches. The plate is then allowed to cool. Afterward it is planed and otherwise machined to the required form and dimensions. The steel face is of hard steel,

* Proceedings Naval Institute, Vol. IX, Part II, page 574.

Digitized by Google

contains from 1.25 to 1.5 per cent of carbon, and offers great resistance to the penetration of projectiles. The steel and "ingot iron" can be produced by the Bessemer or Siemens-Martin process.

It is claimed by the inventor that the great hardness of the steel face will break up any projectiles fired against the plate, and that the back of the plate being tough and ductile, and with a tensile strength of 26 to 30 tons per square inch, is better enabled to support the front layer. It is claimed that cracks or fissures which may be produced on the hard steel face will not extend through the plate. The increased expense in this method of manufacture is an important item. The trials of this kind of armor will be given farther on.

The Miantonomah.—The monitor Miantonomah is the only United States ship of war armored with compound armor. Her turrets are 11½ inches thick, with port plates 12½ inches thick, one turret of Cammell's plates and one of Brown's plates. Her side armor is of wrought iron 7 inches thick.

Steel Armor.—This term is applied to armor plates in which the metal is all steel. The ingots from which the steel plates are made are cast in molds in the same manner that ingots for guns are cast. The steel is produced by the Siemens-Martin process generally. The ingots may be subjected to fluid compression while the steel is in a molten state, and afterward by forging or rolling are reduced to the form and thickness required. At the great steel works of Schneider, at Creusot, France, the immense armor plates having been cast into the required ingots, are put under the 100-ton hammer and there forged into shape. Hammering is the rule for armor plates at Creusot, and the finished plate is carefully annealed after the last working, then raised to a high tempering heat, and the face of the plate for a short distance is tempered in oil. Finally it is partially re-annealed in order to take out the internal tempering strains without reducing the face hardness more than necessary.

U. S. Steel-Armored Ships.—The two 6000-ton armored vessels authorized by Congress in 1886, the monitors Puritan, Amphitrite, Monadnock, and Terror, and the steel cruisers, so far as concerns their armored decks, towers and gun shields, are to be armored with all steel armor. The side armor for the Puritan is to be from 12 to 8 inches thick, while for the other three monitors it is to be from 7 inches for a depth of 3 feet, tapering to 4 inches thick at a depth of 6 feet 1 inch.

Digitized by Google

The turrets and pilot houses of all the monitors are clad with steel armor 11½ to 12½ inches thick.

The 6000-ton armored ships have turrets clad with 10 to 12½-inch plates. The breastworks, conning towers, and ammunition tubes are armored with plates 10 to 12 inches thick. The side armor plates of these two vessels vary from 13 to 10 inches, 13 to 8 inches, and 9 to 4 inches, according to location, being thickest near the vitals of the ship. The protective deck armor of the latest types of cruisers is 3 inches in thickness, and the gun shields are 2 inches in thickness.

Bending and Curving Armor Plates.—A part of the plates on armored ships must be bent or curved to single or double curvature to fit the form of the ship, and plates are not considered as finished until they are so bent or curved. There are three different methods* employed. Two are used in England and one in France. That used in this country will probably be the French system. The first English method is that of the hydraulic press. In this a cast-iron slab of the requisite form is placed on the piston head of the press; upon this the armor plate is laid (outer surface down), and upon the plate are laid cast-iron blocks called packing, also shaped to the curve. The piston then being forced upwards, the hot plate is dished to the required curve. The second system is that of the "cradle." In this the cradle consists of a heavy cast-iron bed plate, to which are attached a system of vertical wood frames, bound at the top with longitudinal stringers. These wood frames have holes bored through them at convenient distances for the purpose of pinning heavy longitudinal timbers used as braces for wedging. Cast-iron shapes of the desired curvature are laid on the bed of the cradle, and then, wide strips being laid around the edge of the plate to protect the hot, soft metal from local deformation, wedges are driven in between the timbers pinned to the frames and the strips on the plate, thus forcing the plate to take the curve.

This method necessitates an adjustment of the plate in the hydraulic press after it is cold. In spite of this bad feature the cradle system is preferred as being quicker, cheaper, and more certain than the press system. By the French system the plate is laid on an anvil or bed plate shaped to the required curve, and is then lightly hammered all over its surface by a special movable steam hammer. The curving is done during the last rolling heat, immediately after the plate is through the last turn of the finishing rolls. In France, curving by

* Proceedings Naval Institute, Vol. IX, Part II, page 565.

Digitized by Google

the press is forbidden, as it is thought to set up interior strains to an undesirable degree.

The Relative Value of Steel and Compound Armor.—This is a much disputed question, and can only be settled by actual trial. At the present writing (1887) it has not been settled beyond doubt, but the weight of evidence and opinion seems to be in favor of all steel armor. At present the rivalry between the two systems is very great. It remains to be seen what the effect will be due to the introduction of Wilson's new process of making compound plates. It will be noticed, however, that the soft steel back of the layer of iron is a concession in favor of steel. It seems unquestionable that these two systems, all steel and compound plates, must approach each other as they each approach perfection.

It must be remembered that the ultimate object of naval armor is to attain the greatest amount of protective power with the least possible weight, and since there is a minimum limit of space to be defended which cannot be reduced, the reduction of weight must be accomplished by a reduction in thickness. Taking first a compound plate, it is evident that the iron back gives a minimum of resisting power; its main object being to hold the hard steel face up to its work. Great surface hardness is readily and safely attainable, and as yet no absolute conclusions have been reached as to the true proportion which the thickness of the iron should bear to that of the steel. Owing to the great ductility of the iron a considerable thickness of steel is necessary, to aid by its greater stiffness and prevent the iron from giving back so much as to distort the steel face and tear it from its connection. If, now, the greater resisting power of steel can be successfully utilized so that a soft steel back may be made to do the duty imposed upon the iron at present, then the true object of obtaining the greatest resisting power for a given thickness will be reached. If this method be adopted, however, the compound plate becomes virtually a steel plate, differing solely in method of manufacturing.

Turning now to the steel system, it is evident at once that by adopting the metal of greatest resistance throughout, the attempt is made to reach the desired end directly. Manufacturing difficulties here present themselves, however, and from late experiments it may be said that it has not been found possible to obtain the same amount of surface hardness as can be reached with the compound plate; and

Digitized by Google

this feature, a very hard face, is a prime necessity in order that the projectile may be broken up. To say that this surface hardening never will be possible is a broad assertion to make in the face of recent progress, and artillerists expect to see the result attained at no very distant day. When the present difficulties of manufacture are surmounted, the superiority of the all steel plate as then constructed will be unquestionable. At present it may be considered at least as the equal of the compound plate, pending further trial and development.

Steel Armor for U. S. Navy. The Qualities required.—The following brief statement of the requirements to be met by the steel makers in the case of steel armor for the Navy will give a good idea of its character.

Casting Ingots.—Whatever method is adopted for producing ingots, at least 30 per cent must be discarded from the upper end and 3 per cent from the lower end. Two chemical analyses are to be made, one from each end.

Physical Characteristics.—By test specimens, cut from the discarded portions as near as practicable to that portion of the ingot from which the plate is to be made, the steel must show a tensile strength of not less than 80,000 pounds per square inch on the original cross section, and a final elongation of not less than 20 per cent, the results being the mean of those derived from four test specimens, two from each end.

Excess of Weight —After the ends of an ingot are discarded, its weight must be at least 34 per cent in excess of that of the trimmed and finished plate. The ingot must be rolled or forged as much as the best practice requires, but in no case shall the ratio between the mean cross section of the ingot and that of the finished plate be less than three. During the process of reduction, no metal shall be cut off except such as will clearly have no beneficial effect on the working of the metal composing the finished plate.

Ballistic Tests.—The ballistic test is the chief one, and the plate which is selected from a group to undergo the test is shaped, completely treated, and finished to dimensions. The bolt holes are arranged in the same manner as for fastening the plate to the ship's sides. The plate is bolted against a strong wooden backing 36 inches thick; the whole structure is braced from the rear, and the bolts used

Digitized by Google

are the same kind as those used on shipboard. Near the middle of the plate are marked three points of proposed impact, arranged so as to form an equilateral triangle, each side in length two and one-half times the diameter of the projectile to be used in the test.

For plates of constant thickness, one apex of the triangle is placed upwards and the other two on a horizontal line below. For plates of varying thickness, two of the proposed points of impact will be arranged on the thinner part on a line parallel to that on which the taper begins and one calibre from it, the third point being placed on the thicker part of the plate.

The calibre of the gun used is, as near as convenient, equal to the maximum thickness of the plate within the triangle.

Steel projectiles of the best quality are used in the test, and the striking velocity necessary to drive the projectile entirely through an iron plate of the same thickness and the backing is used so far as is practicable. The formula used in computing this velocity is given in the chapter on Penetration of Projectiles.

No projectile, nor any fragment of the plate, must get wholly through the plate and backing. The plate must not break up and pieces be displaced so as to expose the backing before the third shot, nor must very large cracks occur which expose the backing before the impact of the third shot. Other rules also prevail, but the above are the main features.

Tests for Deck Armor.—All rolled armor plates for deck armor, light gun shields, and similar purposes, must be of the best material, oil tempered and annealed. Specimens from deck armor must show not less than 85,000 pounds tensile strength and a total elongation of 20 per cent.

Gun Shields must have a tensile strength of not less than 95,000 pounds and a total elongation of 15 per cent.

Armor Bolts and Nuts.—The required tensile strength of bolts is 64,000 pounds, with a total elongation of 23 per cent; the tensile strength of steel nuts must be 78,000 pounds, and total elongation of 14 per cent.

Recent Experiments showing Quality of Armor.—The most reliable recent tests of steel plates were made at Gavre, October 1, 1886, and January 10, 1887.

Steel Plates, *1st Trial.*—The plate was 14.7 feet by 6.8 feet,

Digitized by Google

11.7 inches thick at the upper edge, 7.9 inches thick at the lower edge. Weight of plate 18 tons. Plate normal to the line of fire. Four shots were fired from a 9.45-inch B. L. R., chilled cast-iron projectiles weighing 317 pounds, the striking velocity being as follows: 1281, 1278, 1395, and 1395 f. s. respectively. Striking energy from 3598 to 4287 foot tons. The points of impact were arranged in a triangle, as described in tests for U. S. naval plates. At the end of the trial no portion of the plate was broken off or detached, all bolts remained intact, and the backing was uninjured. The plate was badly cracked in four directions. The projectiles broke up, the heads of the third and fourth sticking in the plate.

2d Trial.—Plate 16.6 feet by 6.7 feet; 17.7 inches thick at upper edge and 12 inches thick at lower edge. Weight of plate 30 tons. Three shots were fired from a 10.6-inch B. L. R., projectiles chilled cast iron, weight 475 pounds, with striking velocities of 1434, 1420, and 1568 f. s. respectively, the striking energies being 6799, 6662, and 8119 foot tons. At the end of the trial no portion of the plate was broken off or detached, all bolts remained intact, and the backing was uninjured. The plate was cracked in four directions and the projectiles broke up.

Compound Plates.—At Gavre, June 18, 1886, a compound plate (St. Chamond) 17 feet by 3.5 feet, 9.8 inches thick at the upper edge and 7.9 inches thick at the lower edge, weighing 10.7 tons, and normal to the line of fire, was fired at with a 7.5-inch B. L. R. Four shots were delivered, the weight of projectile of chilled cast iron being 165 pounds; the striking velocities were 1593 f. s., with striking energies of 2930 foot tons for each shot. At the end of the trial the plate showed several fine cracks, but no shot got through the plate or backing. It will be noticed that this plate received in the aggregate a shock of 11,720 foot tons, while the steel plate mentioned in 1st trial steel plates, of about same thickness, withstood a shock of 15,788 foot tons.

New Compound Plate.—In April, 1887, a compound plate (Cammell) made by Wilson's process No. 2, was tried at Portsmouth, England. The dimensions of the plate were 8 by 6 feet and 10½ inches thick. Three *regulation* rounds were fired from the 10-inch 18-ton gun (M. L. R.) at a range of 30 feet, with a chilled cast-iron projectile weighing 400 pounds. The muzzle velocity was 1364 f. s. and the muzzle energy 5288 foot tons. The hits were

Digitized by Google

distributed in the usual triangular figure and produced no penetration whatever, the projectiles breaking up. No damage was done the plate beyond bruising its face. After this regulation trial there were fired a steel forged shell, a steel cast shell, and a cast-iron shell, all of foreign manufacture. None of the projectiles got through; the steel shells were broken up and the cast-iron shell almost reduced to powder.

Systems of Applying Armor.—The different systems of applying armor differ from each other in regard to the parts of the vessel and armament to be protected. The earlier armored ships were of two classes, in one of which the guns were mounted in broadside, and in the other in turrets. It was usual to protect every part of the ship with iron armor of greater or less thickness. When the power of the gun increased, the thickness of armor correspondingly increased, until it became impossible, even in the heaviest ironclads, to carry the necessary weight to afford protection to every part of a ship. In armored ships the guns are now generally mounted in an armored central citadel, singly or in pairs, in armored barbettes or turrets, while the engines, boilers and water line are the only other parts protected. This has led to the division of armor protection into three systems: the *belt system*, the *central citadel* or *barbette system*, and the *deflective system*. These will be described in their order.

The Belt System.—This consists in protecting the whole water line by an armored belt, the armor being thickest abreast the engines and boilers, and the armor tapers in thickness from a short distance below the water line down. The guns are protected either by breastworks, turrets, or armored barbettes, the other parts of the ship being left unarmored. The French use this system to the exclusion of all others. The monitors may be classed under this system.

The Central Citadel System.—With this system, only that part of the water line abreast the engines and boilers or in the wake of ammunition hoists is armored. The forward and after parts of the hull are left unprotected at the water line and above, but a deflective steel deck extends from the citadel forward and aft, and is so placed and shaped as to prevent projectiles from penetrating to the compartments below. The parts of the hull are subdivided into numerous compartments, and it is claimed that even if those portions above the deflective deck be destroyed or filled with water, that having a reserve of flotation, the ship's stability will not be endangered. The guns are protected by turrets or barbettes as the case may be.

Digitized by Google

The Deflective System or Inclined Armor.—This system has been adopted as the water line defense of cruisers, for gun shields, and has been indicated, in combination with vertical armor, for portions of the water line defense of armored ships. It consists in placing the armor plates at a very small angle to the line of fire of projectiles, so that the latter may be deflected on impact. The details of applying curved or inclined plates, in the form of decks, belong properly to ship construction and will be found in works on that subject. To attempt to protect a ship by what is known as "steep inclination," or when the angle of inclination of the plate with the horizontal is 45° and upward, there is nothing gained over the vertical plate if flat-headed projectiles, or those having a head of such a shape that the projectile will bite the plate at 45° or greater angles of inclination from the horizontal, are used. The same length and height must be covered and the same weight of armor used, while no greater protection to penetration is afforded, because the armor is thinner in proportion to the sine of the angle of inclination, while the energy for penetration decreases in exactly the same proportion. But when the angle of inclination is such that the head will not bite the plate, the projectile glances off, unless the normal component of the energy is enough to smash a hole through the plate, in which case the damage will be caused by flying splinters, the projectile itself being carried off. This is the reason protective decks and shields of small inclination have been resorted to for the protection of unarmored ships, and for the protection of the unarmored ends of armored ships. The armored shield deck has, then, become recognized as a necessary attachment to all modern vessels of war. The different forms of armored shield decks are limited to two, a curved shield, which starts from a point below the water line and forms a crown deck above the boilers and machinery, and the plane-sided shield, as it is sometimes called, which starts from the same point and rises to a height necessary to protect the same parts, the amidship portion being a flat deck. For the Boston and Atlanta a plane-sided shield is used; the Chicago has a modified curved shield. The later cruisers have plane-sided shields.

Gun Shields.—Gun shields are as a rule inclined at an angle of about 40° with the horizontal, and as the plates are of high quality, the normal energy of 6-pdr. and 3-pdr. R. F. G. projectiles is not enough to penetrate them. Some gun shields are, however, sections of cylinders, about 7 feet high and two inches thick.

Digitized by Google

Armor Fastenings.—Armor plates are now fastened to the hulls and backing by heavy bolts varying in size according to the weight of plate. Those for the armored 6000-ton ships are from 2¾ to 3.1 inches in diameter, and from 18.45 inches to 23 inches in length. They are screwed into the armor at the back and do not go through the plate. They pass through wrought-iron tubes in the backing, and set up against the inner skin with steel cups, nuts and washers.

Gruson Chilled Armor.*—Chilled cast-iron armor has never been applied to ships, on account of the greatly increased weight necessary to protect the same area as is now accomplished with steel or compound armor. It has, however, been extensively used in foreign coast defense fortifications, and it is therefore necessary that its character and qualities should be understood by naval officers.

In order to cause the projectile to expend its energy upon itself, or to break up and to distribute the shock over a large area, the surface of the armor is made very hard by some method of casting or treatment which is the invention of Herr Gruson, a German iron founder. The surface of the armor is given a double curvature in order to deflect the shot.

Gruson uses a very tenacious and ductile quality of cast iron; using cast iron because it is susceptible of being molded into any desired shape, and which is so cast as to chill the outer surface only, for a moderate depth.

A double curvature was adopted for the surface of the armor, in order to gain in power of deflection, but for the more important reason that a curved shape gives such a direction to the crystallization that it is in the best possible condition to resist impact and give mutual support to the parts of a plate even when the latter is fractured. This armor is usually disposed in the form of turrets or armored casemates, composed of heavy blocks, which do not require bolt fastenings. The turrets are ellipsoidal in shape, so that all parts are mutually supporting, and the separate pieces are simply joined together by zinc solder.

To give an idea of the resisting power of Gruson armor to withstand a continued bombardment, attention is called to a test which took place in 1874, in Germany, the conditions of a thirty days siege being reproduced so far as possible. A quadrant of a cupola or turret designed to hold two six-inch guns, the maximum thickness of the armor being 21⅛ inches, was hit 288 times, as follows:

* See Proceedings Naval Institute, Vol. IX, Part II, p. 531 et seq.

Digitized by Google

193	5.8-inch long shell,	striking	energy	1550	foot	tons,
20	6.75-inch chilled shot,	"	"	3750	"	
75	5.8 " " "	"	"	1800	"	

or a total striking energy of 508,150 foot tons. No breach whatever was made in the plates, and although cracks were formed, not a single pieced was loosened. Tests even more severe have recently been made, with the result that the plates successfully withstand the impact of projectiles with which they are likely to be attacked in service.

Coal Protection.—Good protection against the fire of medium guns and the lighter calibres of armor-piercing guns has been obtained for the engines and boilers, etc., of unarmored cruisers, by placing loose coal in bunkers, subdivided by bulkheads, outboard, outside the protective deck; and from experiments made in England, it may be said that for protective purposes, *two feet thickness of coal is equivalent to one inch of iron*, roughly speaking.

When filled shell are used, the effect is less than when blind shell or shot are used. The shells bursting in the coal had no incendiary effect and but little disruptive effect. It should be remembered, however, that cruisers depending upon coal protection are more vulnerable as their time at sea increases and their supply of coal runs out.

Digitized by Google

CHAPTER IX.

PENETRATION OF PROJECTILES.

General Discussion.—When a projectile strikes a target and its motion is destroyed, the energy must be dissipated by (1) heating the projectile, (2) heating the target, (3) changing the form of the projectile, and (4) changing the form of the target. All of these but the last are, from the artillerist's standpoint, a waste. The amount of energy which takes the form of heat in the projectile and target is not known, but could be approximately ascertained by the use of bodies which ignited or fused at known temperatures. It is known that the temperature of the shell is sufficiently great to ignite the bursting charge (540° F.), and this indicates an amount of energy which must have been reached or exceeded. The energy dissipated in upsetting the shot is

$$\int_0^a \frac{EA}{l} x dx,$$

where A is the mean area shortened, E the mean value of the modulus of the metal, and l is the original length. This, it will be found, may be a large fraction of the whole energy stored in the shot.

No accurate experiments have as yet been carried out in order to determine the coefficients of resistance for the different materials of projectiles and plates, so that it is difficult to study the subject in a rigidly mathematical way. But practically the amount of penetration, whether for iron or steel plates, masonry, or for earth, has been determined by experiment. A number of formulas have been proposed, based on various hypotheses, and which agree more or less closely with the results obtained in actual firing. The diversity of the formulas proposed testifies to the difficulty of expressing the law of resistance of armored shields to perforation; and it is very doubtful if it be possible to express this law by an exact formula, since the resistance of the plates and the power of projectiles to overcome that resistance depend on so many conditions that escape calculation. Plates vary in different foundries; the same foundry cannot always deliver plates exactly alike, and any single plate is not perfectly homogeneous. The same may be said, to a less degree perhaps, of

Digitized by Google

the projectiles; in addition may be mentioned the variation in shape of the projectile on impact, the possibility of the projectile breaking up, and the amount of heat developed on impact; all of these varying conditions make it practically impossible to apply strictly analytical investigations and deduce a law which will stand the test of general application.

The Penetrative Effect.—Generally speaking, the penetrative effect depends on the shape and material of the projectile, on its energy, diameter, and the direction with which it strikes the target.

Form of Head.—Several forms of head have been extensively experimented with, viz. flat, ogival, hemispherical, and conoidal. For piercing plates by shot striking normal to the surface of the plate, the ogival head of two diameters is considered to have given the best results.

The Ogival Head acts more as a wedge, and consequently gives more penetration than the flat head, especially with thick solid plates, because the flat-headed projectile acts like a punch driving the material of the armor plate in front of it, which no doubt increases the resistance which it meets with in penetration.

The Blunt Trifaced.—This shaped head has all of the good qualities of the ogival of 2 calibres. It bites at a slightly less angle, and it is noticed that the three faces start cracks radiating from the point of impact, owing to the wedging and splitting action of the faces.

Material.—Chilled iron, wrought iron, and steel have been experimented with to ascertain their respective merits for materials to make projectiles for piercing armor plates. Although chilled iron has been used on account of its easier manipulation, its great hardness, and its cheapness, the best material for projectiles to pierce armor would be that which would neither break up on impact nor change its shape.

Change of shape means a loss of energy uselessly expended in heating the projectile; while if the projectile breaks up, it generally fails to impress all its energy on the armor plate. Tough steel more nearly answers the requirements for armor-piercing than any other metal. Forged steel is better than cast steel, as it does not break up on impact; and if the power of the armor for resistance nearly equals the power of the projectile for penetration, it is the only metal that will carry a bursting charge through the plate. With steel-faced

Digitized by Google

armor it is even more necessary to have forged steel projectiles, since experiments show that those constructed of other materials break up on impact.

The Best Weight for a projectile of given diameter is generally found by giving a value to the ratio of $\frac{W}{d^3}$, where $W =$ weight of shot, $d =$ diam. The latest researches give .45 to .5 as the value of this ratio. Thus for a 6-in. gun the weight would be not less than 97 lbs.

In general terms, the advantage of a light projectile with an equal charge is that the muzzle velocity is higher, and, owing to the flat trajectory, the ease of hitting at short ranges is increased; on the other hand, with heavy projectiles, though the M. V. is lower, the resistance of the air has less effect, and thus at long ranges the heavy projectile would be more advantageous.

It perhaps would be advantageous to supply a gun with two weights of armor-piercing projectiles, the lighter to be used at distances where its energy would be greater than that of the heavier projectile. The point where the energies would be equal could easily be determined by a comparison of the remaining velocities at different ranges.

Penetration of Inclined Armor.—Experiments in Denmark with inclined armor of various kinds show that plates 4 inches thick, inclined at an angle of 24° with the horizon, backed with wood and having an inner skin of ½-inch iron, will keep out 9-inch shot or shell, steel or iron, weighing 228 pounds, when fired with a striking velocity of 1330 f. s.; or a 6-inch shot or shell, steel or iron, weighing 102 pounds, fired with a striking velocity of 1700 f. s. Also that 2-inch armor inclined at an angle of 7°, with the same backing, will keep out the same projectiles. It was found that the projectiles generally broke up on impact.

Against inclined armor for angles greater than that at which the projectile will bite the plate, the ogival-shaped head will give the best penetration, other things being equal. For a projectile with ogival head of 2 diameters, this angle is about 40° with the face of the plate. Flat-headed projectiles will bite at an angle of impact with the surface of the plate of about 30°. When the power of the projectile for penetration greatly exceeds the power of resistance of the plate, as in the case of thin plates, these angles are very much smaller.

Digitized by Google

It is evident that an ogival-headed projectile will not penetrate thick armor at a less angle of impact with the face of the plate than that made by the tangent to the projectile at its point and the surface of the plate. This will be seen from an inspection of the figure.

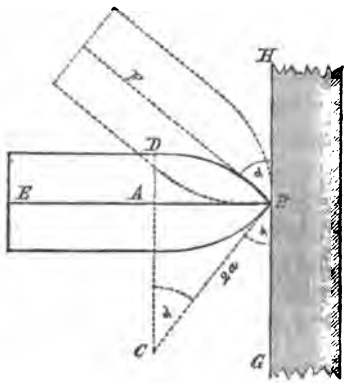

The angle made by the tangent CB with the face of the plate is equal to the angle ACB, and when the head is struck with a radius of 2 diam., if α be the diam., we have cos. $\alpha = \frac{3}{4}$, $\therefore \alpha =$ 41° 30′, about. Similarly it may be shown that when the head is struck with a radius of 1½ diam. that the angle will be about 48°. If the plate is of comparatively soft metal, such as wrought iron and low steel, the shot will bite at a slightly less angle, owing to the fact that the plate bends slightly on impact and increases the angle between the tangent and the surface.

EXAMPLE.—The Hotchkiss 6-pdr. projectile has an ogival head of 3 calibres radius. What is the width of target on a circular turret of iron 30 feet in diameter on which these projectiles will bite? The turret is at such a distance from the gun that the trajectories are sensibly perpendicular to a diameter of the turret. *Ans.* 25 feet.

It has been demonstrated experimentally at the N. O. P. G., heads of various shapes having been used, that the flat-headed projectile is the superior of all others, at short ranges, against armor inclined at small angles to the line of fire. Even when the projectile glances, its effect is greater than with projectiles of the same weight with heads of other form. It would seem, then, that some flat-headed projectiles for attacking armor inclined to the line of fire, turrets for example, at close range, might be of advantage in a ship's outfit. For extended ranges, the loss of energy due to loss of velocity, the resistance of the air being about as 2 to 1, as compared with the ogival of 2 calibres, reduces the efficiency for penetration of the flat-headed projectile to a marked degree.

Empirical Formulas for Penetration.—For thin plates which can be easily penetrated, experiment seems to show that the projectile acts as a punch, cracking the plate *circumferentially*, at the same time bulging it on the inside, where it also commences to crack. In

Digitized by Google

this case the method of estimating the resistance per inch of projectile's circumference gives good results, but in cases where the projectile acts as a wedge and drives the resisting material before it, the method of estimating the resistance per square inch of sectional area gives approximately better results. The truth probably lies between the two, inclining the more to the one or the other according as a punching or wedging action is brought into play.

The formulas are all for penetrating rolled iron armor. Among them is the following, due to Major Noble, R. A.,

$$\text{Penetration in inches } (S) = \sqrt[1.6]{\frac{e}{2.53}}, \qquad (1)$$

where $e =$ energy per inch of circumference $= \dfrac{WV^2}{2g\pi \,.\, d \,.\, 2240}$, W being weight of projectile in lbs., and V its striking velocity in feet per second.

Another, of English origin, for thick plates is now used at the U. S. Naval Proving Grounds:

$$S = \left(\frac{e}{0.86}\right)^{\frac{1}{2.035}}, \qquad (2)$$

where

$$e = \frac{WV^2}{2g\pi \,.\, d \,.\, 2240}.$$

According to this formula, the penetration of solid wrought-iron armor by the Navy 6-in. B. L. R. projectile 100 lbs., striking velocity 2000 f. s., would be 12.52 inches.

Col. Maitland's formulas, depending upon the assumption that the resistance varies as the cross section of the projectile, are as follows:

$$S = \frac{e}{14.87},$$

where

$$e = \frac{W \,.\, V^2}{2g \,.\, r^2 \,.\, 2240}, \qquad (3)$$

$W =$ weight of projectile in lbs.
$V =$ striking velocity in f. s.
$r =$ radius of projectile in inches.

Maitland's new formula is

$$S = \frac{v}{608.3}\sqrt{\frac{w}{d}} - 0.14\,d,$$

in which

$w =$ weight of projectile in lbs.
$d =$ diameter of projectile in inches.
$v =$ striking velocity in f. s.

The latter formula is that now used in England.

Digitized by Google

A formula proposed by Gen. Froloff, Russian army, has the merit of great simplicity, and gives very good results; in fact, it agrees more closely with experiment with armor of all thicknesses than any of the preceding, except perhaps Maitland's second formula.

It is $S=\frac{F}{576}$ (4), for armor up to 2½ inches in thickness, $F=\frac{WV}{d^2}$, W being weight of projectile in lbs., V striking velocity in feet per second, and d diameter of projectile in inches. The quantity F Froloff calls the *force of penetration of the projectile.*

For plates above 2½ inches in thickness the following formula should be used instead of (4),

$S=\frac{F}{400}-1.5$ inches (5). F meaning the same as before.

According to this formula, the penetration of wrought-iron armor by the Navy 6-in. B. L. R. projectile 100 lbs., striking velocity 2000 f. s., is 12.38, which agrees well with the result obtained by using formula (2).

When a target is penetrated by oblique fire, it is generally found that the projectile turns and penetrates nearly normal to the plate. The normal velocity is then $V \sin \theta$, if θ is the angle made with the face of the plate. In formulas in which V^2 is used the value $V^2 \sin^2\theta$ must be substituted, and in the formula by Froloff $F=\frac{WV\sin\theta}{d^2}$.

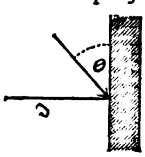

Projectiles which are recovered after having penetrated armor, if of wrought iron or steel, are generally found to be set up in the direction of their length, and the point of the projectile is twisted to one side of the axis of the projectile before firing, the latter effect being due to the rotary motion which the projectile has on striking the target.

Whitworth has, however, succeeded in making forged steel shell which have been fired through 12″ solid wrought-iron armor three times, having been fired twice without altering the shape. The length of a projectile should be taken into account when considering the subject of penetration, since experiment shows that the plate grips the shot very firmly, and with very long shot the friction is enormously increased. The rolled steel projectiles, and some made by Krupp, have also been very successful, rivalling the results obtained by Whitworth.

If we assume, as is sometimes done in formulæ for determining

Digitized by Google

penetration, that it varies as the square of the velocity of impact, it may be shown that the resistance to penetration is constant. Take the origin of axes in the surface of the plate where the projectile will strike, and the axis of X through the plate, then we have

$$V^2 - v^2 = kx,$$

where V is the velocity of striking, and v the velocity when the distance x has been penetrated. Let p be the whole penetration, then

$$k = \frac{V^2}{p}.$$

From this,

$$\frac{dx}{dt} = V\left(1 - \frac{x}{p}\right)^{1/2}$$

$$\therefore \quad \frac{d^2x}{dt^2} = -\frac{Vp^{1/2}}{(p-x)^{1/2}} \cdot \frac{1}{2p} \cdot \frac{dx}{dt} = -\frac{V^2}{2p}.$$

It may also be shown that the time of penetration is the ratio of twice the distance penetrated to the striking velocity. For example, a projectile having struck an iron target with a velocity of 1500 f. s. and penetrated 14 inches, the time of penetration was $\frac{1}{643}$ second, nearly.

On the Laws of Penetration of Wrought-Iron Armor Plates.—An examination of Krupp's experiments upon the penetration of armor plates shows, calling $2r$ the diameter of the projectile, t the thickness of the plate, and e the energy of the shot per unit cross section, that:

1st. When $2r$ is constant, the quantity $\frac{e}{t}$ increases with t, so that the curve representing the relations between e and t may be considered a parabola.

2d. When t is constant, the quantity $\frac{e}{r}$ decreases when r increases, so that the curve between e and r may be considered a hyperbola.

3d. When $\frac{2r}{t}$ is constant, $\frac{e}{t}$ is also constant.

So that the general law connecting the three variables r, t, and e must be written so that the value of e shall be represented by a parabola, a hyperbola, or a straight line, according as $2r$, t, or $\frac{2r}{t}$ is constant.

The following form satisfies these conditions:

$$e = at + b\frac{t^2}{2r}. \qquad (1)$$

Digitized by Google

The following numerical data are given as proof of the three laws: For the first, when $2r$ is constant, for the 15 cent. gun:

t cent.	Δt	e tonnes-métres.	Δe	$\frac{\Delta e}{\Delta t}$
15		1.500		
	5		.700	.140
20		2.200		
	5		.770	.154
25		2.970		
	5		.830	.166
30		3.800		

For the second, when t is constant, for $t = 20$ cent.:

$2r$ cent.	$\Delta . 2r$	e tonnes-métres.	Δe	$\frac{\Delta e}{\Delta . 2r}$
12		2.400		
	3		.200	.066
15		2.200		
	2		.080	.044
17		2.120		
	3		.050	.016
20		2.070		

For the third, when $\frac{2r}{t}$ is constant, for $\frac{2r}{t} = .75$:

$2r$ cent.	t cent.	e tonnes-métres.	$\frac{e}{t}$	Diff.
12	18	2.060	.114	
				+ .002
20	30	3.470	.116	
				— .001
24	36	4.149	.115	
				.000
28	42	4.830	.115	

The above results determine the constants in (1), and give, in the units of the numerical data,

$$e = 0.073\, t + 0.027\, \frac{t^2}{2r}. \qquad (2)$$

This formula has been tested by repeated application to Krupp's results, and gives, when compared with experimental results, quantities which are sometimes too large and at others too small. It is thus thought to represent well the law connecting the three variables.

If we change (2) so that e shall be in foot-tons per square inch and t and r in inches, it becomes

$$e = 3.863\, t + 1.429\, \frac{t^2}{2r}. \qquad (3)$$

Digitized by Google

In this form it is immediately applicable in our units, e being in foot-tons per square inch and t and r in inches.

The penetrating power of shot is sometimes considered to depend upon their energy in foot-tons per inch of circumference, and (3) may be easily transformed to suit this. If e_1 be the energy so stated, we have evidently

$$\frac{e_1}{e} = \frac{r}{2},$$

whatever value t may have. Inserting this relation in (3), we have

$$e_1 = 1.932\, tr + 0.357\, t^2. \qquad (4)$$

The particular curves represented by (4) when $2r$, t, and $\frac{2r}{t}$ are constant will not, however, be the same as before.

The differences between the values given by (4) and by experiment are greater than in the case of (3), and they increase as the diameter of the projectile increases, since they have been multiplied by $\frac{r}{2}$.

The above is taken from a memoir by M. Martin de Brettes, which is contained in the Comptes Rendus of the Paris Academy of Sciences, tome 99, No. 17, October 27, 1884.

Resistance of Armor Plates when Backed.—The power of any plate, whether iron, compound, or steel, to resist penetration is greatly increased by the thickness and character of the backing. In testing plates it is usual to have them very strongly backed by timber, and sometimes to have the edges of the plates supported by adjacent plates.

The following formula, used at Gavre, France, has given very good results, and is used to determine the velocity necessary for a given projectile to pass entirely through an iron plate and its wooden backing. The projectile is supposed not to change in form while passing into or through the target:

$$\frac{W}{d} V^2 = 3507\, E^2 + 2265464\, \varepsilon^{1.4}, \qquad (5)$$

in which

d = diameter of the projectile in inches.
W = weight of projectile in pounds.
V = the velocity at impact, in f. s.
E = the thickness of the backing in inches.
ε = the thickness of the armor plate in inches.

Digitized by Google

Relative Penetration of Steel and Compound Armor as compared to Wrought Iron with the same Projectiles and Striking Velocity.—There are no formulas extant which will give a correct result when compound or steel plates are opposed to the projectile. Roughly speaking, with compound or steel armor the penetration is about two-thirds that in wrought iron when the same projectiles and striking velocities are used. Thus, by way of illustration, at the N. O. P. G. a 6-inch steel trifaced projectile of forged steel, weight 100 pounds and with a striking velocity of 2000 f. s., just penetrated a compound plate (Cammell) 8 inches thick, composed of 3-inch steel and 5-inch iron. The projectile broke up. The penetration in wrought iron would have been about 12.5 inches. The penetration depends so largely on the power of the projectile to resist work upon itself as to greatly modify the above rough approximation under different circumstances.

Late Experiments.—The following brief statement of the results of late experiments may perhaps assist in making a mental calculation of the power of projectiles to penetrate armor. These experiments show the power of the projectiles to hold together.

Against Armor placed normally to the Line of Fire.—We have the following:

June 11, 1885, a 15-inch compound plate (Cammell), 10 inches of iron and 5 inches of steel, was struck by two St. Chamond forged steel shell weighing 552 pounds each, the plate being 12 feet high and 6 feet wide. The first shell went clear through the plate, breaking off the upper left corner, and was picked up to the left of the target, whole, but with eight small cracks at the steadying band, the largest of which was 4 inches long. Striking velocity not given. The second shell penetrated the plate to the farther side, not going through, but rebounding, whole, with four cracks running the length of the head to the front band, and one in the cylinder. The entire lower part of the plate was demolished.

September 11, 1885, trials were made at Le Bouchet, France, against a 5.9-inch iron plate (Marrell), 13 feet by 3.28 feet in area, and backed by 31 inches of wood. The projectiles were of St. Chamond steel, 7.48-inch calibre, weighing 158.7 pounds. Four shots were fired, with striking velocities computed as follows: 1245, 1248, 1246, and 1245 f. s. respectively. The heads were tempered as described in the preceding chapter. The first projectile went through, but

Digitized by Google

broke up. The others went through whole, being set up .05, .07 and .06 inch respectively; points distorted .06 to .08 inch.

February 12, 1885, at Gavre, a 10.6-inch shell, of St. Chamond forged steel, weighing 476.2 pounds, was fired with a striking velocity of 1525 f. s. against a Creusot steel plate 9.84 inches thick, backed by 33 inches of wood. The plate was warmed. The shell on being tried with a file was found to be perfectly hard on the surface of the head. The projectile went through the plate and target and buried itself in the earth 550 yards beyond. On being recovered it was found to be intact, without a crack.

In June, 1886, at Ochta, Russia, a St. Chamond 11-inch steel shell, weighing 554 pounds, was fired with a striking velocity of 1480 f. s. at a Cammell compound plate 15½ inches thick. The shell just penetrated through the plate and rebounded 30 feet, intact. Froloff's formula gives for penetration of iron, using the above data, 15.44 inches. Maitland's new formula gives 15.73 inches. The power of the above projectile, since the penetration was 15.5 inches in steel armor, is quite remarkable. If the projectile had not held well together the penetration would have been about 10 inches, as shown by other experiments at the same time on the same plate with projectiles of less toughness.

At Shoeburyness, May, 1886, a 12-inch Firminy hard steel shell, weighing 718 pounds, was fired with a striking velocity of 1850 f. s. against a 16-inch Cammell compound plate backed by 12 feet of timber. The shell went through the plate and 7 feet of the backing. The penetration of wrought iron by Maitland's second formula is 21.85 inches. Projectiles of softer steel broke up and failed to penetrate through the target.

Against Armor inclined to the Line of Fire.—At Gavre, June 12, 1885, the inclination of the target being 70° with the line of fire, a 13.4-inch St. Chamond steel shell, weighing 926 pounds, was fired at an iron plate 15.75 inches thick, with a striking velocity of 1455 feet. The projectile went through the plate and backing, carrying large pieces of the plate with it.

At Gavre, December, 1886, steel projectiles from four firms were tested. The best result of the four kinds was as follows:

A St. Chamond forged steel shell, weight 1716 pounds, calibre 16.54 inches, was fired against an iron plate 19.69 inches thick, placed at an angle of 70° with the line of fire, the striking velocity being 1410 f. s. The shell perforated the plate, just going through, and was

Digitized by Google

recovered intact. The French artillerists decided that the oblique fire of 70° with the line of fire against the iron plate represented the equivalent of a normal fire against a solid steel Creusot plate of the same thickness.

The penetration of the Hotchkiss projectiles in iron, steel, and wood is given in the tables for those guns, Chapter IV. The following additional data may be interesting:

At Spezzia, 1886, normal fire, the Hotchkiss 6-pounder projectile, M. V. 1805 f. s., range 100 yards, penetrated 5½ inches iron and 10 inches oak backing.

At N. O. P. G. 1885–6, same gun and projectile, with striking velocity of 1820 f. s., target normal to line of fire, the projectile went through a compound steel plate 3 inches thick, backed by 7 inches of oak.

Against targets representing the gun shields, of tempered steel 2 inches thick, and inclined at an angle of 40° with the line of fire, range 72 feet, the 6-pounder projectile failed to penetrate the plate.

The 3-pounder projectile failed to penetrate a 2-inch steel plate when placed normal to the line of fire. The conclusion to be drawn from these experiments is, that the inclined part of the gun shields will effectually keep out projectiles from the 6-pounder and 3-pounder guns.

The Attack of Armored Ships.—As the general character of armored ships is known, the thickness of the armor, its kind, and the parts of the ships protected, certain general rules may be laid down for their attack, with reference to the guns to be employed for certain work, as follows:

It is very important to know whether the ship is clad with iron, steel, or compound armor. If *iron*, it is useless to attack with projectiles which have not at least 1000 feet striking velocity for each calibre in thickness of the armor. Thus a 12-inch gun requires at least 1000 feet striking velocity for each 12 inches, 1500 for 18 inches, and 2000 for 24 inches. As the ship is seldom exposed to a perfectly direct blow, the chance of heavy armor being perforated is small, and it will be, as a rule, useless to fire steel *filled* shells, and much more chilled-iron *filled* shells, at thick armor; oblique impact almost always breaking shells up. Steel forged armor-piercing shells *unfilled* should be used when perforation is to be attempted, unless the guns are of very great power as compared to the armor.

Digitized by Google

If the armor is steel or compound, the chance of perforation is small by a single blow, in the case of the most heavily plated ships, but continued fire may break up the armor. Guns which are no match for the armor and which would be useless against it if it were wrought iron, may assist in breaking up hard armor in long-continued fire; and altogether the primary attack of the side armor of heavily armored ships, unless made by guns of power far outmatching the armor when it is steel-faced or steel, can only be successful if the ship is long exposed to it.

Wrought iron *must be perforated* and steel and compound armor *must be fractured*, unless the power of the gun greatly exceeds the power for resistance of the armor. The former is effected by the power of the gun for perforation, and the latter probably in proportion to the energy of the projectile.

Keeping these general rules in view, the attack of special classes of armored ships may be stated in general terms as follows: the older styles of broadside ironclads, of which there are still many in use, are clad along their whole broadsides with from four and one-half to six and eight inches of iron armor. Thus clad, they can hardly be attacked in any place with shrapnel fire, or by that of machine guns and rapid-firing guns, including the 9-pounders. Any modern rifled gun, however, of 5-inch calibre and upward will perforate this armor, when hit directly, at fighting ranges. The fire of guns not able to penetrate the sides is useless, however long continued, and their fire should be directed against tops, exposed guns, etc., or what is known as the secondary attack. Later types of ironclads clad on the belt system, with some unprotected guns, the heavier guns being placed in heavily armored barbettes, or constructed with unarmored ends, with protective decks, and central citadels, barbettes or turrets, heavily armored, are attacked by the fire of the secondary battery being directed against the unarmored ends, the tops, crews in barbettes, and against the guns unprotected with heavy armor. The lighter guns of the main battery using common shell should also be directed against the unarmored ends and unprotected guns. Only the heaviest guns using steel forged armor-piercing shot or shell can hope to make any impression on the heavily armored citadels, turrets, and the side armor of heavily plated ships. By destroying the unarmored ends of a heavy seagoing armored ship her speed and handiness may be reduced, if not her stability endangered. The armored decks of ships being now made of 3-inch steel plates, seldom

Digitized by Google

will suffer from direct fire unless the angle of fall is greater than 10°. If ships are steaming in a narrow channel or are at anchor, a well directed shell fire from rifled mortars of heavy calibre and at high angles will probably do great injury to all parts of the ship above the armored deck.

In the case of cruisers it is not necessary to lay down any rule, as they are vulnerable above the protective deck to the attack of all guns of modern construction, even the smaller calibres of rapid-firing guns. Common shell would seem to be the most effective projectile to fire from the guns of the main battery.

Digitized by Google

CHAPTER X.

TORPEDOES.

Torpedoes may be divided into two classes, viz. *defensive* and *offensive*.

Defensive Torpedoes, or those used for the defense of harbors and channels, are commonly known as submarine mines. In the United States this class of torpedoes are under the control of the army engineers, but as they are a very useful adjunct to a naval blockading squadron, and as a harbor of refuge for repairs to a disabled vessel may be quickly defended by them, a general description is necessary. Submarine mines may be either *ground* or *buoyant*, while the means of firing at hand will modify their use. A *ground mine* is employed in comparatively shallow water, and consists of a case resting upon the bottom, and containing a large charge of the explosive. Floating near it, but usually so far below the water surface as to be concealed from view, are one or more buoys carrying circuit closers or breakers; to regulate the current through a fuze imbedded in the charge. A *buoyant mine* is designed for use in deep water, and consists of an anchor holding in position a torpedo floating just below the surface; the latter contains the charge, the fuze, and the circuit closer or breaker. If desired, the last named can be carried by a separate buoy, so placed that when touched by outriggers or other torpedo catchers, the mine will be directly under the vessel. The channel to be defended is thickly studded with lines of these mines, so arranged with respect to each other that no vessel can pass without coming in contact with one or more of them. The system may be arranged to permit easy electrical tests, by which an injury at once becomes known, its value and position. It may be so contrived, that upon the disturbance of any mine or cable by a boat, an automatic fire of grape, canister or shrapnel may be concentrated upon it. Electric lights can be placed so as to sweep the lines of mines, giving additional security against the enemy clearing the obstructions. The system may also be arranged so that a friendly vessel may pass without injury, while an enemy following would be

Digitized by Google

Fig. 1

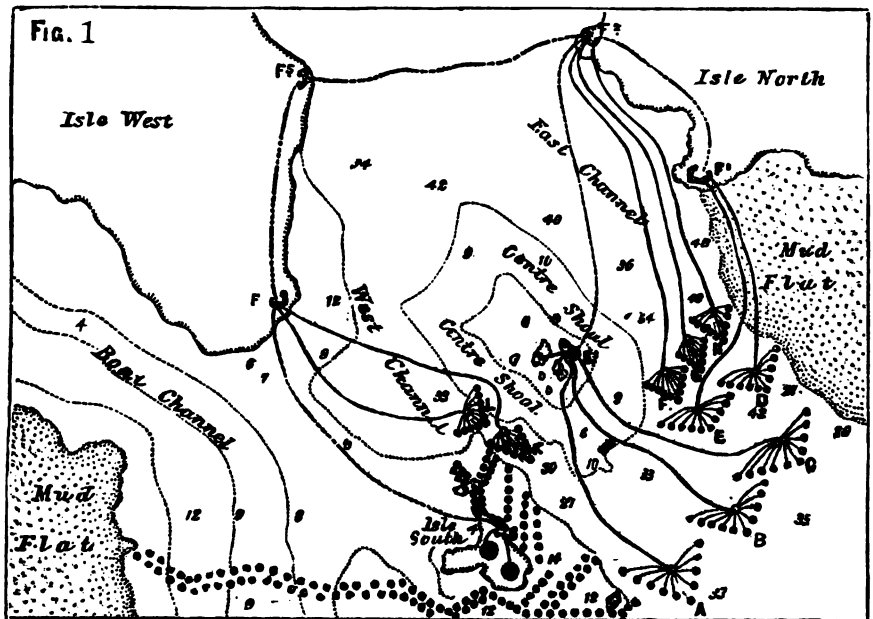

Fig 2

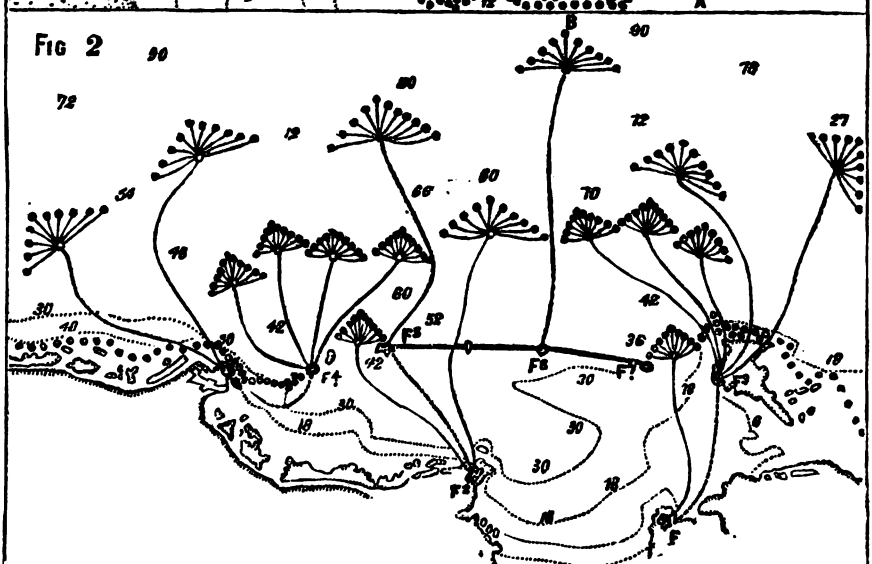

Fig. 3

GROUP FORMATIONS FOR FIXED SUBMARINE MINES

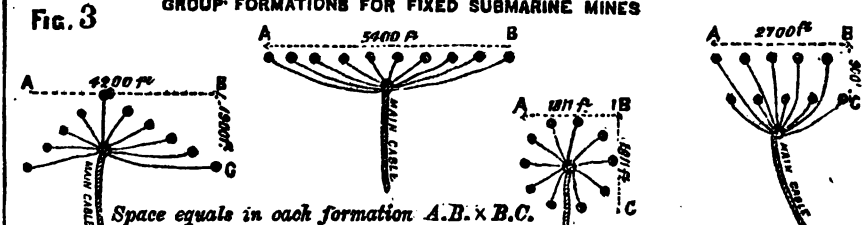

Space equals in each formation A.B. × B.C.

Digitized by Google

in danger. A few rules may be given for planting defensive torpedoes. A place should be selected and plotted upon a chart, and ranges established; the positions adopted being those where the water gives sufficient depth and where the enemy's vessels are likely to pass, while, if possible, avoid the strongest tide. The shape and size of the group of mines will depend upon the situation, the number of torpedoes to be employed, and the facility for landing the cables. Buoyant mines should be moored so that they will remain steady, and should be far enough apart that the explosion of one of a group will not affect any of the others. The figures 1 and 2 (p. 178) show methods of defending close and open harbors respectively, while figure 3 shows different grouping of submarine mines. [These figures are taken from Lieut. Sleeman's (R. N.) article on the *Defense of Harbors by Submarine Mines.*]

A buoyant torpedo may be used as a floating or drifting torpedo for defense or offense, allowing it to float with the tide or current, the explosion depending upon some mechanical means placed within the torpedo or near it.

Offensive Torpedoes include all those employed in offensive warfare, either by use on the end of a spar or boom projecting from the vessel or boat; by towing from a vessel under way; or by being projected towards the enemy, and then remaining under the control of an operator at the point of departure, or acting automatically. The spar torpedoes are of many forms and varieties, while their manner of use is peculiar to the different services employing them in warfare. Those furnished to the vessels of the United States Navy will be explained at the practical exercise of torpedoes. A towing torpedo is intended to be so shaped and so steadied by towing lines and guys that it will take a position on a vessel's quarter, enabling her to steer clear of her enemy, and yet be able to bring a torpedo in contact.

The towing torpedo has been discarded by all countries as being inefficient, France being the last to withdraw it from service. Spar torpedoes are going out of general use, although this form is still used by the French and by the United States. Torpedoes which are made to operate from boats, ships, and shore stations against ships are of two kinds, the *controllable* and the *automobile* torpedoes.

Controllable Torpedoes.—To this class of weapons belong the *Lay*, *Lay-Haight*, *Patrick*, *Smith*, *Ericsson*, *Nealy*, *Scott*, *Sims-Edison*, and *Brennon* torpedoes, in which, by wires or otherwise,

Digitized by Google

connection is maintained by the operator with the torpedo, and usually by electric current, the course of the torpedo may be changed, the machinery stopped, backed, and the charge fired at will; the propelling power being compressed air, electricity, or condensed carbonic acid gas. By means of a float above the torpedo, or by rods and disks, the direction and position are kept in view. This class of torpedoes are for coast defense, and are not used in actions between ships, or in the attack of ships by torpedo boats.

Automobile Torpedoes.—The motive power of these torpedoes is contained within the machine itself, and is set in operation just before or at the moment of being launched toward an enemy. After being launched, they are beyond further control of the operator. This class of torpedoes is used also in coast defense, in narrow channels from shore stations; but it is used more generally, and to the exclusion of all other types except the spar torpedo, for the attack of ships by boats and in actions between ships. There are two principal kinds: the *Whitehead*, which has achieved great success and is in almost universal use abroad, and the *Howell*, the invention of Captain Howell, U. S. N., which bids fair to prove a worthy rival of the Whitehead. A third type, invented by Lieutenant Hall, U. S. N., is yet in the experimental stage.

The Whitehead Fish Torpedo.—Its shape is that shown in the figure. It is divided into three parts, connected together by screws, viz. (1) the magazine chamber; (2) the adjustment chamber, in which is placed what is known as the secret; (3) the air and engine chamber. Vertical and horizontal steel fins are fitted for the purpose of maintaining the torpedo in an upright position whilst passing through the discharge tube or frame; the vertical fin runs nearly the whole length of the weapon, while the horizontal one is considerably

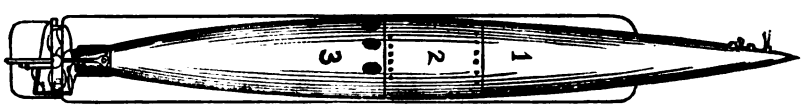

Fig. 4.

shorter. The motive power of the torpedo is compressed air, forced by means of a powerful steam air-compressing pump into a portion of the steel chamber (No. 3) at a high tension, and which by means of a set of small Brotherhood engines drives two screw propellers. The torpedo is made of various sizes, ranging from 14 feet long and

Digitized by Google

14 inches maximum diameter, to 19 feet long and 16 inches maximum diameter.

Capabilities of the Fish Torpedo.—These are as follows: 1st. If adjusted for a certain depth, from 5 to 15 feet, and projected from above water, or if started from the surface, or if discharged from a submerged tube, it will rapidly attain that depth, and maintain it during the run.

2d. If fired in still water, it will make a straight run in the line of projection, provided that an allowance has been made for the deflection due to transverse currents.

3d. It can be adjusted to stop after having run any distance up to its extreme range, and after stopping, to sink, float, or explode.

4th. Its range and speed vary considerably according to the pattern of the torpedo.

Placing the Charge.—The explosive is generally placed in a cartridge case, which is similar in shape to the interior of magazine chamber No. 1, and is fixed thereto by means of wooden wedges.

Ignition.—This is mechanical, and consists of a tube containing a rod acting by the force of a stout spring against a detonating cap. The firing pin or rod is two feet long, and is held back from the cap by a catch, which is released on the application of pressure of the nose piece, or of the vertical and horizontal arms called whiskers.

Safety Wedge.—This is fitted to the catch to prevent it from acting, but is so arranged that it may be withdrawn by the machinery after the torpedo has run a short distance, or by similar means can be placed in position before the completion of the run. A system of cog wheels and rods is used to accomplish this. A safety key in the head of the torpedo may also be inserted as an extra precaution. To sink the torpedo at the end of the run, this long nose rod is connected to a spiral spring valve, which, when opened, admits sufficient water to the adjustment chamber to sink the torpedo.

Adjustment of the Depth.—This is regulated by a spiral spring, which is set at a certain pressure; any change from this pressure will cause the spring to act on a rod connected with the horizontal rudders. This causes the torpedo to maintain a certain depth. To assist the spring and to keep the torpedo level, an automatic balance is used, this being also connected with the horizontal rudders. By turning a graduated wheel on the exterior of the torpedo before firing, the desired depth may be regulated.

Digitized by Google

Methods of Projection.—The projection of the torpedo may be accomplished through a tube in the bow or stern of the vessel, from a carriage above the surface, or from the surface. When projected from below or above the surface, the tube or carriage is fitted with a piston worked by compressed air, which gives initial motion to the torpedo. The French use a small charge of gunpowder. A projection on the side of the tube or carriage throws a lever, which starts the engine. In projecting on the surface this lever must be turned by hand, when the torpedo will gain headway and immediately attain the depth adjusted for. To prevent undue strain on the rudders, etc., when projected above the surface, a movable lip, to throw the tail of the torpedo up as it passes out, is provided. Frames are made for carrying these torpedoes in boats and launches, but they can be towed alongside without derangement of their apparatus.

The Whitehead torpedo has no directive force in a horizontal plane. If pointed fairly it will go straight, owing to its length, if there are no disturbing exterior forces. If any force be applied to turn it from its course, such as hitting a pile or chain cable, for example, it will maintain the new direction. The weight of the torpedo is, for a 14½-foot machine, the usual size, between 500 and 600 pounds, while the largest, or 19-foot machines, weigh 800 pounds. The charges vary with the size of the torpedo, from 40 pounds to 105 pounds of gun-cotton, and the speed is from 20 to 27 miles an hour for short distances. The effective range of this weapon does not exceed 400 yards, that is, a hit cannot be counted upon with reasonable certainty above that distance. The effective range of the smaller sizes may be taken as about 300 yards.

The Howell Torpedo.—A sketch of this torpedo is shown in Figures 5 and 6. The motive power of this torpedo is a steel fly-wheel, Fig. 6, which is given a very rapid motion of rotation by the axle being grasped by the clutch of a Barker's mill driven by belt and steam power, and which is detached when the requisite speed of rotation is acquired. The torpedo is 8 feet long and 13.3 inches in diameter. The shell is of spun copper; total weight of torpedo 325 pounds, including 70 pounds of explosive. The guaranteed speed is 23 knots for 200 yards, and a total range of 800 yards. The fly-wheel weighs 110 pounds and is spun up to 10,000 turns a minute, thirty seconds being required to attain that velocity. In larger models the proportion of charge to the total weight is about one-third. The propulsion is by twin screws, the shafts being geared directly to

Digitized by Google

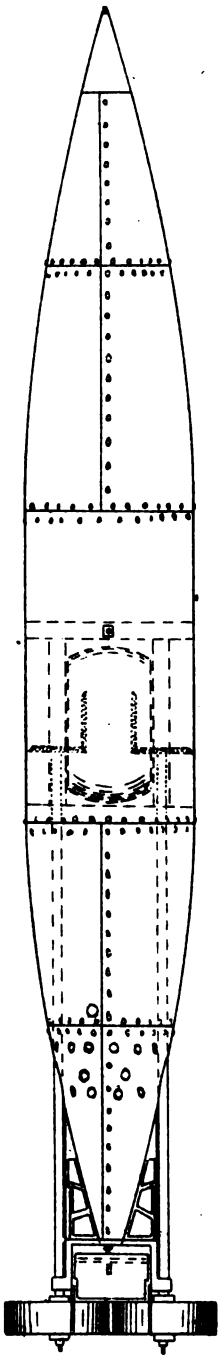

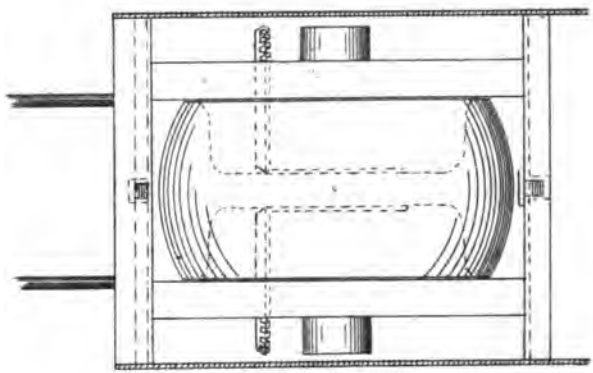

Howell Torpedo.

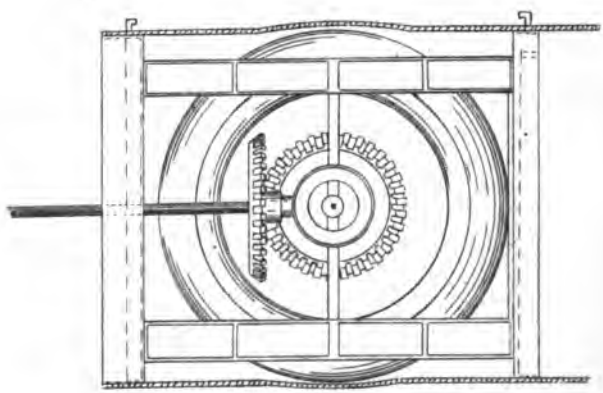

Digitized by Google

Digitized by Google

the fly-wheel; the stored-up energy of the wheel is used to drive the twin screws.

This torpedo has great directive force, that is to say, when started in a given direction it will always maintain a course parallel to that direction when the extraneous force tending to deviate it from the original course no longer acts. The axle of the fly-wheel is horizontal and perpendicular to the axis of the torpedo. Now, if any force tends to turn the torpedo, and consequently the fly-wheel, about any other axis than the one about which it is revolving, there will be a resultant motion perpendicular to the plane of the two axes. This resultant motion will cause the torpedo to roll. This rolling effort is used, by means of a pendulum and suitable machinery, to actuate a rudder which restores the torpedo to its original course; when on the original course the rudder ceases to act.

The torpedo is maintained at a constant depth, to which it is set to run by a horizontal rudder, which is operated by mechanism whose action is controlled by a combined pendulum and hydro-pneumatic cylinder, the piston of which moves with the varying external pressure at different depths.

The propellers are surrounded by tubes which, by reason of the mass and velocity of the water flowing through them, assist to maintain the torpedo at a constant depth, and prevent irregular movements in a vertical plane.

The apparatus for discharging the torpedoes consists of a tube in which the torpedo will be placed within the ship or torpedo boat. At the inner end are two compressed air cylinders whose piston rods reach forward and press against studs on the middle body. The tube and support revolve about a centre to allow lateral training, the power for revolving the fly-wheel being conducted through the centre.

Steam from the Barker's mill exhausts back into the condenser, thus stopping the humming sound which would betray the presence of a torpedo boat at night. The mill clutches the axle until the torpedo is launched. By one action of a lever the power is shut off and the torpedo ejected. The explosive is carried in the forward compartment and is fired on contact. The advantages of this torpedo are its great directive force, its handiness, size, efficiency, and the comparative cheapness of manufacture as compared to the Whitehead.

Torpedo Boats.—These are specially constructed for speed, and are fitted with torpedo tubes for launching the automobile torpedoes. They are also provided with one or more machine guns.

Size.—The earlier boats were 60 feet long and had a speed of 18

Digitized by Google

knots, about. It has been demonstrated by experience, beyond a doubt, that a torpedo boat to be able to accompany a fleet to sea and to operate on an enemy's coast must be of very much greater size. Boats are now built from 130 to 150 feet in length, with a displacement of from 70 to 150 tons, and having a speed of from 22 to 27 knots an hour. The heavy boats are able to keep the sea in all weathers, have greater speed and endurance, and are less trying on their crews. The tendency is now for boats of not less than 150 tons displacement for sea-going torpedo boats, while a few have been built in Germany of a displacement of 220 tons, having a length of 185.3 feet, and armed with six revolver 37 mm. cannon.

Builders.—Herreschoff, of Bristol, R. I., is the only American builder who has paid special attention to the construction of torpedo boats and launches. Yarrow and Thornycroft, of England, Schichau, of Germany, and several French firms are the principal foreign builders.

Defense against Torpedoes and Torpedo Boats.—The only defense against torpedoes *not* carried by boats, is the torpedo net, a minute subdivision of compartments, and a bright lookout.

If the attack is made by boats, however, every effort must be made to destroy the boats before they succeed in getting within 300 or 400 yards, or the range at which they can fire their torpedoes with effect; and it has been demonstrated that in a day attack the guns are more than a match for the boats. At night the chances are more in favor of the boats. Electric search lights should sweep the horizon, and if at anchor, a cordon of picket boats should be placed at a sufficient distance to give timely warning. The torpedo net now being introduced will play a very important part in the defense. The net is composed of steel rings about 6 inches in diameter, united by smaller rings, and the size of the sections of net are 20 by 20 feet. Enough sections are carried to protect the ship all around when at anchor. They are rigged out by steel spars, the heads being supported by topping lifts, and the heels placed low enough so that when rigged out they will not interfere with the fire of the guns. The nets are raised by steam winches, and the spars or outriggers form awning stanchions when not in use with the nets; brails are also provided, as well as fore and aft guys. The spars are 32 feet long, carrying the net 29 feet from the hull. Vessels when steaming are able to carry the nets *on each side* and yet make 8 or 9 knots with the nets down and dragging.

Experience has proven that the nets are a perfect protection against Whitehead torpedoes if the torpedo hits the net.

Digitized by Google

CHAPTER XI.

THE PRINCIPLES AND PRACTICE OF NAVAL GUNNERY.

Gunnery Defined.—Gunnery is concerned with the use of guns, while Ordnance refers rather to the designing and building of guns and their equipment. The gunnery officer, then, should be an expert in all things concerning the use of guns at sea. He must have a knowledge of exterior and penetration ballistics, and, in a less degree perhaps, of interior ballistics; must know how to drill and handle gun's crews under all circumstances; and must also give much of his attention to what is called the tactics of the gun—that is, those rules of fighting tactics which are enjoined by the presence of guns in ships. In our army there is an artillery and an ordnance corps; the former using and the latter making guns. This division of labor is thought by many army officers to be an unfortunate one, because of the want of harmony between the two corps which might arise; but it will serve our purpose of illustrating the difference between gunnery—which is the seaman's equivalent for the word artillery—and ordnance. In the English navy, again, those officers who have passed through a certain course of study at a gunnery school are called gunnery officers, and receive an advance of pay as long as they hold their certificates. These gentlemen, besides their knowledge of the theory of gunnery, are required to know the various gunnery and infantry drills, and the enlisted men aboard ship are not usually promoted from one rating to another until they have been examined by the gunnery officer in these drills.

The Importance of Gunnery.—As the customs of the Navy now stand, a good knowledge of gunnery is very important. All officers, or nearly all, are called upon to manage and control guns throughout their whole lives. They begin by being the junior officers of gun divisions, where perhaps they take charge of one gun, and rise afterwards successively to the position of divisional officer, of the officer in charge of the whole of the ship's battery—the first lieutenant—and finally to command a ship; in which position their knowledge

Digitized by Google

of what can be done with guns and how best to do it may be of inestimable service to them. Gunnery and ordnance are so closely related, are so much two parts of an indivisible thing, that there can be no contention between them for a first place in our estimation. The two must go hand in hand; gunnery laying down clearly what it wants, ordnance supplying the want, and finally, gunnery making use of the thing supplied. But although the two are so closely interwoven and so much of co-ordinate importance, yet we must admit that, to the great body of sea officers, a good and sound knowledge of gunnery is of greater importance than is that of ordnance. And, for the expert, the man who knows all that is written and all that is said, a single branch will suffice; though, while so confining himself, he would naturally acquire so much knowledge of the other branch as would help him in his specialty.

Gunnery Further Considered.—Naval gunnery is, then, concerned with the use of guns at sea; and it is the business of all officers and men to know everything that will help them to handle guns effectively, and it is also their business to acquire all possible skill in the performance of anything which they are required to do. The divisional officers, for example, must know the drill thoroughly, and must have sufficiently studied the subject of handling guns to be able to make any small changes in the drill which the peculiarities of a ship or particular gun-mount may necessitate. It may at first sight appear that there is not much use in an officer of division understanding the science of exterior ballistics; but when it is recollected that this officer's duty does not end with "giving the right order," as laid down in the drill book, but that he must be able to decide for himself whether everything at the gun and in the drill as laid down is right—must, for instance, be able to correct the position of the marks on a sight bar—the reasons for such knowledge will be apparent. With the enlisted men, the case is, however, different. They have not that preliminary training in mathematics and in the physical sciences which will enable them to understand the applications of science to gunnery, and therefore the range of their knowledge must be narrower. Their duty is to keep the guns and all parts of their equipment clean and in good order for use; to know all parts of the drill, and particularly those parts which refer to their own gun number; and to be skillful in the discharge of these functions—to possess the skill of hand, eye and foot which comes only with long training. The training of the officer should, as much as is possible,

Digitized by Google

include that of the enlisted man; but the officer should aim more especially at acquiring the knowledge and skill which will enable him to direct. The officer, for instance, should know everything regarding the ballistic qualities of the gun, while the gun-captain's training should enable him to point so quickly and accurately, and to control his crew so well, as to put a large number of shots into a target in a short time.

Sighting Guns.—The first operation in putting the sights on a gun, or in *sighting* it, as it is commonly called, is to obtain, on the outside, a line parallel with the axis of the bore, the line along which the centre of gravity of the projectile should pass. Then if, by raising one of the points which determine the position of the former line, it is inclined at any angle to the latter, we have obviously the method in use afloat for pointing all classes of guns. A method of adjusting the line parallel to the axis of the bore will be found described in Arts. 1089–1092, Ordnance Instructions (edition of 1880). In order to set this line at any angle (angle of elevation) with the axis of the bore, we have to solve a plane triangle, in which two angles and a side—the distance between the sights—are given. So far we are able only to direct the axis of the gun at any desired inclination with the line along which we look over the sights—the line of sight; in order that the sight bar, which carries the movable point, may give other useful information, it must have inscribed on it the range and time of flight, referred to the proper plane. The best plane of reference is a matter of choice, the horizontal plane through the muzzle being probably the best, and the one usually chosen. In order to obtain the ranges and times of flight of a given projectile for various angles of elevation, either the gun may be set at 1°, 2°, 3°, etc., and fired, and the ranges and times of flight directly measured; or else, knowing the initial velocity, weight, and form of the projectile, the elements of its flight may be calculated.

Marking Sight Bars.—Having ascertained, either by actually firing a gun or by computation, the angles at which the gun must be set for various ranges, the marks on the bar are easily placed. But it must not be forgotten how the angles of jump and of sight enter. If the gun is ranged by actually firing it, the process used has given us the angle at which the gun must be set—the angle of elevation; and in this case, the angle of sight must also be found and correctly applied. In using the ballistic tables, on the other hand, to find the ranges due

Digitized by Google

to certain angles of *projection*, we must be careful to apply the angle of jump in the correct sense before marking the bar. Suppose that, either by calculation or by firing a gun, we have ascertained a sufficient number of data to enable us to draw a curve connecting either angles of elevation or sight-bar height with range throughout the whole range of distance for which it is proposed to mark the sight bar, what and how many marks should we put on it? It is customary, generally speaking, to put a mark at every 50 or 100 yards; but there are not wanting those who would advocate a departure from this rule—who would make the intervals of range longer at short ranges and narrower at longer ones. And such an opinion is warranted by a rational consideration of the subject, and by the fact that it is best to mark the bar so that, while it is in use, it need not be moved any oftener than absolutely necessary. If we assume, as is the truth, that the height of targets attacked by ship's guns is about 12 feet, it is apparent at once, by remembering how the dangerous space diminishes as the range increases, that the increments of range by which the marks on the sight bar proceed may be much longer at from 500 to 1000 yards, say, than at 5000 or 10,000 yards range. The above considerations have led to the proposal of firing guns, particularly rapid-fire guns, between certain limits of range, with a fixed sight bar. This is called Fire with a Fixed Sight Bar, and constitutes an important part of the use of rapid-fire guns against targets whose distance is changing. Another important consideration in putting the marks on a sight bar is that indicated by the rules regarding their use in firing: if we train our gun-captains to use a coarse sight in pointing—to take an eighth of an inch, or any assigned length, of the front sight in the notch when aiming, obviously the marks should not be put in the place indicated by the use of a fine sight. If the gun is fired for ranging under circumstances identical with its use, then the marks will all come in the right place, but if we find their positions entirely by calculation, we shall put them on for a fine sight; and, because of the varying degree of fineness of aiming with the degree of light and amount of rolling—particularly with the latter—it might be advisable to put the marks on an outer sleeve on the sight bar, so that this sleeve might be moved as indicated by the amount of roll. This matter will be referred to again when we come to the subject of Rules of Fire, and the differences in the appearance of sights according to whether the eye is close to the breech sight or at a distance in rear of it, will be described under the heading Optical Principles of Sighting.

Digitized by Google

The Form of Gun Sights.—It is difficult to lay down anything positive regarding the proper form of the sights for naval guns. Until very recently, all our guns had a blunt knife edge for the front sight, and a rather deep and wide notch for the rear sight, with an attachment to the latter permitting it to be moved to the right or left to allow for speed of gun or target, and for wind. In the English navy, the allowance for speed of gun and target is made by moving the front sight; this admits of motion in *one direction* only, and thus the correction cannot be applied in the wrong sense. Of course, the *relative* speed of gun and target may be in either direction; but the English appear to think it unnecessary to apply this correction unless the gun and target are moving in opposite directions, when their relative speed may be high. The sight notches of guns are mounted on a bar which has motion in a sleeve, the bar being often inclined to one side of the vertical to compensate for *drift*—the constant sideways deviation of rifle projectiles due to their spin. It is thought by many that our service sights might be improved, and it seems likely that an extended course of experiment, in which a number of men should be required to use sights of differing patterns as they are used on board ship, joined to a careful study of the optical principles involved, might result in improvement. Peep-sights, so greatly in favor in match shooting with rifles ashore, cannot be used at sea, because the gun-captain must never lose sight of the target.

In the case of a test applied to the sixteen first and second gun captains of the Richmond in the summer of 1887, it was found that the accuracy of their aiming was not materially altered by changing from the comparatively fine point and narrow notch of the Gatling's sights to the broad point and notch of the 9-inch S. B. In this trial the sights were about the same distance apart, and the target upon which the aimings were received (see the description of an eye test by means of a movable card carrying a mark on it, and a fixed piece of paper behind it, further on) was at 30 feet distance from the sights.

Optical Principles of Sighting.—In sighting a gun, the eye must so adjust itself as to see in their true positions three points; the rear sight, the front sight, and the target; the first of these being distant by the length of the lock lanyard, the second at this distance plus the sight radius, and the third at a distance which is enormously great as compared with the other two. Now, this is optically impossible, and the eye learns to focus so as to see all three points more or less imperfectly; and, what is of great importance practically, it will be

Digitized by Google

found that, if a gun is pointed with the eye close up to the rear sight, and the eye then moved back somewhat, the pointing will appear erroneous. It was found, for example, that if the 3-inch B. L. R. was pointed at the water line of a ship some 800 or 1000 yards distant, and the eye then moved back about 4 feet from a close proximity with the rear sight, the gun appeared to be pointed too low, and the bar had to be lowered about 75 yards to make it seem right. This was tried at the Naval War College at Newport in the summer of 1886, by a number of officers, and they all agreed, after adjusting the line of sight with the eye close up to the notch, that the gun appeared to be pointed short when the eye was moved back. The explanation of this seems to be that the eye, when moved back, requires more light from the front sight in order to see it, and therefore must take more of it in the notch. The extreme importance of the phenomenon in the sighting of guns will not fail to be appreciated. If a gun has been sighted by firing it, and if the eye of the person who pointed it was always, during the process, back in the position which the gun-captain's eye will occupy when using the gun in a seaway, then the marks will be in the right place. But since guns are always fired for ranging at a proof grounds, the eye of the pointer is close up to the notch, and thus we fail to take account of what has been pointed out.

The Error of the Eye.—The errors of the eye of an individual in pointing with particular sights may be ascertained in the following manner: mount a pair of gun sights conveniently at any place so that the position of both—and thus that of the line of sight—is firmly fixed; and then set up, at a convenient distance along the line of sight, a board carrying a piece of paper having no marks on it. The line of sight should pass through the fixed piece of paper at about its centre. Then, taking a movable card, having a dot of suitable size on it, cause a man, by looking over the sights, to adjust the dot, while the movable card is held against the fixed piece of paper, in the line of sight. When he has done this, pass a pin through the centre of the dot, to mark the fixed piece of paper behind; move the dot away slightly, and repeat the process several times. Then remove the card, and the dispersion of the pin points found on the fixed piece of paper is a measure of the skill of the eye of the aimer. This test was applied to the gun-captains of the Galena, Richmond, Ossipee, and Yantic, the target being at 30 feet range, in the summer of 1887; and it was found that the general average of the total vertical dispersion (the average height of the rectangles containing all

Digitized by Google

the pin points made by one aimer) was 0.22 inch. This shows that the skill of the gun-captains was such that if they all aimed one-half the way up a target 2 feet high, when it is at 1000 yards range, about one-half of them will put the line of sight on it always (or hit it when firing with an accurate gun); the other half will fail at times.

The Position of Sights.—Guns are either central or side-sighted; that is, their sights are either in the vertical plane passing through the axis of the bore, or else the plane including them and the axis of the bore is inclined. As the gun itself furnishes a well marked line to the eye, central sights are usually best; but these become inconvenient at great ranges, and then the side sights are generally resorted to. There is a question as to the distance between the sights of a gun—the sight *radius*, as it is generally called—which is of great importance, and which affects central and side sights equally. There is every reason to suppose that, as the distance between sights increases, the errors in placing the line of sight on a target will diminish. This will be made very clear by noting that if the sight radius were extended to its utmost length—the length of the range—we should never fail to put the line of sight on the target; and if it may be assumed that the errors of the eye consist in taking too much or too little of the front sight in a *linear* sense in the notch, it follows that the errors will diminish in simple proportion with the increase of the sight radius. As bearing out this view, the following experiment may be adduced. In the summer of 1887, the sixteen gun-captains of the Richmond were put through the eye test with a movable card with the sights of a 9-inch S. B. gun when these were mounted at their usual distance apart, and also when this distance was doubled (39 inches in the first case and 78 inches in the second). The men were not told what they were doing, and everything possible to secure equality of condition was attended to. The average vertical and sideways dispersions in the two cases were as follows:

Vertical Dispersion.	Sideways Dispersion.
Long radius, 0.26 inch.	Long radius, 0.18 inch.
Short radius, 0.40	Short radius, 0.31

Here the dispersions, though not reduced one-half by doubling the sight radius, are reduced in nearly that proportion. As showing the extraordinary looseness of practice in this important particular, the following table, giving the length of the sight radius of a number of guns in units of calibre, is inserted:

Digitized by Google

U. S. N. 9-inch S. B.,	4.3
" 3-inch B. L. R.,	4.6
" 8-inch M. L. R.,	5.6
" 60-pdr. B. L. R.,	7.4
" 80-pdr. "	7.4
" 8-inch "	9.5
" 6-inch "	9.8
Hotchkiss 6-pdr. R. F.,	16.6
" 3-pdr. "	20.3

Since these guns are not of the same system, we should hardly expect to find them *similar*—that is, should hardly expect to find all their dimensions equal, when stated in units of their calibres; but, on the other hand, there is no apparent reason for so great diversity. The list is arranged in order of the increase of sight radius, but a glance shows also that, roughly speaking, it is arranged in the order in which the guns were built. We thus conclude that the present tendency is towards increasing the sight radius, and that the Hotchkiss firm, who have embodied so many admirable *gunnery* features in their guns, are in the van of progress.

The Clearance and Permanent Angles.—It is evident that with central sights, and if the front sight is not on the muzzle, as the gun's elevation is increased, an angle of elevation will be reached at which the line of sight will foul the muzzle. This angle is called the *clearance* angle, and for ranges greater than the one corresponding to it, guns are usually pointed by means of the side sights. The *permanent* angle is that fixed inclination to the right (or left) which is given the sight bar to compensate for the drift of elongated projectiles. It is generally assumed that the drift of rifle projectiles increases uniformly with the range, and to find the permanent angle as follows: The gun is set and fired a number of times under identical conditions, and the deviations, right or left, found and averaged. Then we have, D being the average deviation, R the range, and d the amount the notch must be moved to one side to bring the point struck into the line of sight,

$$d = \frac{D}{R}\, l \sec \alpha,$$

where l is the sight radius and α the angle of elevation. Also, calling the permanent angle i, and h the height of the sight bar, we have

$$\tan i = \frac{d}{h}.$$

Digitized by Google

(See the diagram, page 8, in Exterior Ballistics.) The above process, though not quite accurate, is sufficiently so for purposes of practice, and is the one nearly always adopted. When additional accuracy is desired, a table is added, giving supplementary corrections; and these are applied when the range at which the gun is being used makes this necessary (see top of p. 34, Handbook of the Hotchkiss Rapid-firing Gun). Several attempts to calculate the drift of elongated projectiles from their known conditions of flight have of late been made, and have been attended with some degree of success. The reasoning upon which these calculations are based is as follows: If the resultant of all the parallel forces of the air's resistance passes in front of the centre of gravity of the projectile, then, as is the case with right-handed rifling, if the upper surface of the projectile moves from left to right, the observer being in rear, the effect of this resultant combined with the rotation impressed, will be to cause the geometrical axis of the projectile to describe a cone about the trajectory which the projectile's centre of gravity describes, the apex of the cone being at the centre of gravity, and the upper part of the nappe in advance being described from left to right. The point of the projectile thus moves to the right first, and the resistance moves the projectile bodily to the right. This would be the case during the description of the first and second quadrants by the point; during that of the third and fourth quadrants, the shot would, however, be moved bodily to the left. It seems probable, though, from the increasing aperture of the cone, that for moderately short ranges and times of flight, the point would not get to the left of the trajectory, and thus the motion wholly to the right. Drift may also be partly due to the following cause: For simplicity, let us suppose that the problem is first to find the value of p in the couple rotating a rifle projectile when the gun is just going to turn over out

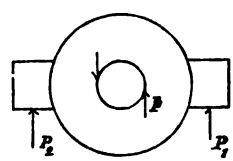

of its trunnion holes. Let P_1 and P_2 be the whole pressure on each trunnion respectively, and a the distance from the axis of the gun to the points of application of P_1 and P_2, W the weight of the gun, and r its radius of bore. Then the gun being level and without preponderance, the conditions of equilibrium are

Digitized by Google

$$P_1 + P_2 = W,$$

$$P_2 a - 2pr - P_1 a = 0,$$

whence

$$P_1 = \frac{W}{2} - \frac{pr}{a},$$

$$P_2 = \frac{W}{2} + \frac{pr}{a},$$

and $P_1 = 0$ when $p = \frac{Wa}{2r}$. If $a = 3r$, as would approximately be the case, $P_1 = 0$ when $p = \frac{3}{2}W$. Suppose now that the gun has an angle of elevation, and that the couple exceeds that necessary to raise the right trunnion, then the gun has an initial angular velocity ω (say) about its point of support, this rotation being in a plane inclined at the angle of elevation to the vertical. The vertical component of this rotation will be destroyed by the action of gravity; and its horizontal component, which will move the right trunnion to the rear, by friction and impact in the trunnion holes. Of course, if the rotation couple does not reach the limit assigned, the tendency will be towards that stated, though the angle through which the gun is turned will be less.

The Firing Interval.—The length of time which elapses between a man's throwing himself back on the lock lanyard and the projectile's clearing the gun has been called the firing interval, and its ascertainment for each kind of firing device is very important in order to secure good shooting in a seaway. If we always fire at a fixed time of the ship's roll, we shall finally perhaps learn to correct for this interval; but if, from the imperfections of the arrangements used for firing guns, the interval varies from shot to shot, we can hope to do no accurate shooting. Thus we are led to the conclusion that not only should the firing interval be made as short as possible, but also, and above all things, it must be constant—hang fires must be a thing unknown. If a ship is rolling at an angular rate of 1° per second, the line of sight of her guns will be about one-eighth second in sweeping across the freeboard of a ship 20 feet high when she is at a distance of 1000 yards; thus the perceptions of gun-captains must be exceedingly acute, and the firing interval very short and perfectly constant from fire to fire, if we are to hit such a target, for an angular roll of 1° per second is low rather than the reverse. It has been found that, with the old navy percussion lock, such as are now fitted to all S. B. guns, the interval between the gun-captain throwing himself back on the lock lanyard and the explosion of the

Digitized by Google

primer is 0.13 second (experiments made at the Naval Academy with the Schultz chronograph). This is more than one-eighth second, and thus it becomes apparent, without adding the interval necessary for the shot to get out of the gun, that, if the gun-captain begins to pull the lock string of a gun rolling 1° per second and fitted with these locks, when the line of sight is on the hammock rail of a ship 20 feet high at 1000 yards range, the shot will strike in the water short of the ship, the roll being downwards, of course. The only way of correcting in practice the errors which will be caused by the firing interval is to put the bar higher or lower than the mark according to whether the gun will be fired while falling or rising. A thorough test of the smallness and constancy of the interval of any firing device should precede its adoption.

Finding the Range.—Leaving aside for a moment the ascertainment of the range by the use of the sight bar itself—by observing the points of fall of the projectiles and bringing these to the target by moving the sight bar—which is, in many cases, the best means available—there are only two ways of finding it at sea: one is called Buckner's method, and the other consists in angling on some object in the target whose length is known. We cannot use simultaneous or successive observations on board ship, because of the continual change of form of any triangle which we may select to operate with; and, since we must know three parts of any triangle, we must know beforehand one part of even right triangles with which we deal. The attempt to measure the distance of a target at a considerable distance from us—when alone the determination is important—by means of two observers at the ends of a ship or at the ends of a backstay, is futile, as a very slight examination of the subject will show.

To Find the Distance when the Length of Some Object in the Target is Known.—The distance may in this case be found with great nicety by angling on the object referred to. The distance, for example, from a ship whose main truck is known to be 170 feet from the water may be found to within 4 or 5 yards, when the ship is 1000 yards distant. Any dimension of the enemy's ship will serve this purpose; as, for instance, the height of his mast or smoke-stack, the distance between his masts, or his length; though in case of using either of these last two, we must ascertain that he is broadside on to us.

Digitized by Google

Buckner's Method.—In the figure, let OB represent the sea level; A the position of an observer at a known height, AB, above it; O, a point in the visible horizon; K, the object whose distance is required. Then we have

$$CAO = \text{dip},$$
$$KAB = 90 - (CAO + OAK).$$

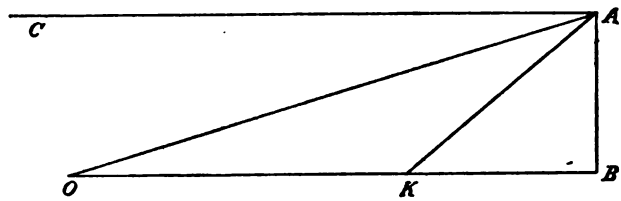

If, then, the angle OAK be measured with a sextant, we have given in the right triangle KAB, AB and KAB, whence KB can be found. A table for the convenient solution of this triangle will be found on page 448, Ordnance Instructions. A glance at this table shows us that, with height of eye of 50 feet only, and with a target at the distance of 1000 yards, 1 minute of angle corresponds to about 20 yards range. The accuracy attainable in the estimation of the distance is thus ample for all purposes of gun practice.

The Stadia.—A short stick suitably marked—usually called a stadia—and held at a fixed and known distance from the eye, will enable us to estimate the distance of an object whose height is known; but this method would obviously be used only when nothing better was attainable, as, for instance, with landing parties.

Other Methods of Finding the Distance.—The distance may be estimated with some degree of accuracy by observing at what distances different objects become visible: for instance, at certain distances, the running rigging of a ship would appear clear and sharp, at somewhat greater distances the heavier ropes, at somewhat greater, the outline of painted figures would appear indistinct, and so on. In all manuals of rifle target practice, the distances at which a normal eye can see the different parts of a man's figure and clothing will be found laid down. Another method of finding the distance consists in noting the time between the flash and report of the enemy's guns; for this purpose, the Boulengé military telemeter has been supplied to our ships. This consists of a glass tube about half an inch in outside diameter and six inches long, in which a piston falls

Digitized by Google

by its weight when the cylinder is vertical. The instrument being horizontal with the piston at its upper end, is turned into the vertical position when the flash of a gun is seen, and then horizontal again when the report reaches the observer. The distance the piston has fallen, read off the scale, gives the distance of the gun immediately.

The Limit of Error Permissible in the Distance Determination.—Leaving out of account for the moment the errors of the gun itself and those of the gun-captain in using it, it is clear that, if we always aim half way up a target, we may make an error in the range used of one-half the dangerous space in either sense without missing the target. If, however, the guns are always to be aimed at the water line of the target, which is the safer and more usual custom, we may make an over-estimate of the distance equal to the whole dangerous space, and can have no under-estimate without the shots striking short. The dangerous space for guns even of high power, with targets of ordinary height at considerable ranges, is very short; being, with a 6-inch rifle, firing a 100-pound projectile with 2000 f. s. velocity at a target 12 feet high when at 3000 yards range, nearly 200 yards. With guns of less power, the diminution of the dangerous space, and the consequent narrowing of the limits of error permissible in the distance determination, is very rapid; being, for the target above, when at 1000 yards range, and with the 8-inch M. L. R., only a little over 100 yards. Though we may be able, by means of Buckner's method, when the circumstances are fairly favorable, to determine the distances of targets within the limits thus assigned, they are far too narrow for us to hope to be able to do the same thing by merely estimating with the unaided eye.

Distance for which the Whole Range is Dangerous Space.—There is clearly a range for which, with a target of fixed height, the whole range is dangerous space. Suppose a gun is firing at the water line of a target, and that the height of the target and that of the apex of the trajectory described by the shot are equal; then, if the target is moved towards the gun, there will be two vertical rows of shot holes made in it: one described from down up, while the target comes from its first position to the apex of the trajectory, and the other described from up down, and superposed on the first row, while the target comes from the apex to the gun. This range is one of the most important *tactical* features of the gun. Its ascertainment belongs to exterior ballistics, of course; but its

Digitized by Google

importance is from its tactical significance, from the fact that we care little about whether we know the range or not when within this distance of an enemy's ship; we need only be sure of a certain skill in our gun-captains to know that we shall get numerous hits. This range has been called the *dangerous range*. The dangerous range for modern guns of high power, for targets 12 feet high, is about 1100 yards; for guns of more moderate power, such as our 8-inch M. L. R., it is about 800 yards.

The Degree of Accuracy Necessary in Gun-Captains.—Having thus examined the degree of accuracy necessary in the estimation of the distance, and having ascertained that, with guns of good power, within perhaps 2000 yards, and with targets of average height, we shall be able to get the distance nearly enough for practical purposes in many cases, we come to the degree of accuracy which we must insist upon in the gun-captains. But first we must note that the high velocity and flat trajectory of late guns does *not* require more skill on the part of gun-captains, when they are firing at vertical targets, as is usually the case. This fact will be rendered clear by drawing a flat and curved trajectory through a vertical target, and by recollecting that, by the principle of the rigidity of the trajectory, we may rotate them both, together with their common chord, about the gun end of the trajectory without change of form. This, of course, is not true of a horizontal target; for a given error in pointing a high power and a low power gun at a horizontal target, the range error of the first will be greater than that of the second. The rigidity of the trajectory shows us again that, when thinking of the question of the accuracy to be required in the pointers of guns, we need think only of the line of sight; for the small changes of direction of this, due to errors in pointing, we need not draw the trajectory at all. This evidently results in great simplification.

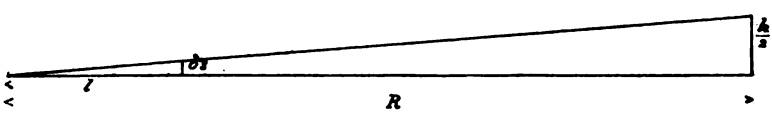

Then, when pointing at the centre of a target of height h, when at a range R, the sight radius being l, we may admit an error

$$\pm \delta s = \frac{\frac{h}{2}}{R} l$$

Digitized by Google

in the amount of the sight point taken. This is shown by the diagram. If a greater error is admitted, the line of sight will, at times, be off the target. If $l = 39$ inches, $R = 2000$ yards, and $h = 12$ feet, we have from the equation above

$$\delta s = .039 \text{ inch.}$$

It has been stated, in the paragraph on the Error of the Eye, that the average of the vertical dispersions of the gun-captains of the North Atlantic Squadron, on a target 30 feet distant, was 0.22 inch. This being with a sight radius 39 inches long, we have for the corresponding error in the use of the sight point, as the above figure shows,

$$\delta s = \frac{.11}{360} 39 = .012 \text{ inch.}$$

Thus the average gun-captain of this squadron is well within the limit of accuracy required. If the length of the sight radius were 59 inches, as is the case with the 6-inch B. L. R., we should have a still better showing.

The Accuracy of Gun Practice.—When we come to examine the accuracy of the practice of guns, whether on the proof grounds, where everything is favorable to precision and where there is no haste about pointing, or in the circumstances of service, either at target firing or in battle, we find a condition of things totally different from what our knowledge regarding the errors of the eye might lead us to suppose. An average gun-captain, as has been seen, working with service sights, can put the line of sight always on a target 2 feet high at 1000 yards range, provided he has all the time he wants and a good light; but the Hotchkiss R. F. 6-pounder, a very accurate gun, requires a vertical belt nearly 7 feet high to catch all its shot at 1000 yards range when they are fired at its centre, and under the circumstances of the proof grounds. And, with the present degree of skill, an average gun-captain, firing in smooth water while on board ship at a target 1000 yards distant, will require this target to be about 32 feet high in order that all his shot may strike it. In this case again it is assumed that the fire is directed half way up the target, and the datum upon which the statement rests is the record of a considerable number of target firings of ships.

Errors of the Gun.—The principal cause of errors inherent to the guns and their projectiles is probably unsteadiness of flight. It is well known that small changes in the position of the rotation bands of projectiles cause very great differences in the mean errors of flight;

Digitized by Google

and, even when the band is at the right place, the rotation of the projectile is not always exactly about its geometrical axis. Side winds also cause considerable side errors, and differing conditions of the atmosphere, differing projectile force in the powder and differing resistance of the air. These causes and others, such as varying light and varying amount of roll, almost too numerous to mention, cause the errors of guns at sea.

The Assigning the True Causes of Errors.—With all these numerous errors to which the practice of guns at sea is liable, it is important to be able to fix the cause of any error which has occurred. If a man of fair skill—one who has had some experience as a gun-captain—fires a shot at a target supposed to be 1000 yards distant, and the shot falls half way to the target, this fact is as good evidence that our appreciation of the distance is incorrect as would be the ascertainment of this fact by triangulation. If, again, an individual is unable to strike a target 20 feet high when at 1000 yards range after several trials in favorable circumstances of weather, we know that he has some defect which unfits him for the position of gun-captain. If, to take another view of the matter, we find that all the guns of a ship are shooting over—that the centre of impact is being planted beyond the target—and the distance is known, and the range used equal to the distance, it must be, if the sight bar is correctly marked for the ammunition, that, either from a want of good light, or lively rolling motion, the gun-captains are using too coarse a sight. And again, if we should find that guns on covered decks shoot higher than those on uncovered decks, we might conclude that the want of light on the former caused a fuller sight to be taken.

The Probable Errors of Guns in Circumstances of Practice.—The probable errors of guns, when pointed and fired by men of average skill in smooth weather at sea, are about 4 yards vertical and 5 yards sideways. From the probable vertical error just laid down it follows that, with guns of high power, the probable range error is about 75 yards; with guns of moderate power, such as our M. L. R., it is about 50 yards. It is evidently very difficult to measure such a quantity as the probable range and side errors of an average gun-captain, when using his gun at sea under circumstances favorable to accuracy. But the determination of these quantities, with whatever degree of precision may be possible, is most important; as, without such knowledge, we shall be unable to form an estimate of the probable effect of our fire, and to regulate it, by observing the points of

Digitized by Google

impact, to its best effect. If, for instance, the probable vertical error of a gun at sea, when in the hands of a man of average skill, at 1000 yards range, is 4 yards, we know that, if we fire half way up a target 24 feet high, when it is 1000 yards distant, we shall put about one-half our shots into it. And, recollecting that the probable range error corresponding is, with high-power guns, 75 yards, we know, almost to a certainty, that, if we have fired at a point 1000 yards off and the shot went 150 yards beyond, the range used is too great. Without some approximate knowledge at least of the errors which will occur in the use of our guns, we are thus unable to regulate their fire to advantage.

CHAUVENET'S TABLE.

Factor.	Per cent.	Factor.	Per cent.	Factor.	Per cent.	Factor.	Per cent.
0.02	1	0.49	26	1.02	51	1.74	76
0.04	2	0.51	27	1.04	52	1.78	77
0.06	3	0.53	28	1.07	53	1.82	78
0.07	4	0.55	29	1.09	54	1.86	79
0.09	5	0.57	30	1.12	55	1.90	80
0.11	6	0.59	31	1.14	56	1.94	81
0.13	7	0.61	32	1.17	57	1.98	82
0.15	8	0.63	33	1 19	58	2.03	83
0.17	9	0.65	34	1.22	59	2.08	84
0.18	10	0.67	35	1.25	60	2.13	85
0.20	11	0.70	36	1.27	61	2.18	86
0.22	12	0.72	37	1.30	62	2.24	87
0.24	13	0.74	38	1.33	63	2.30	88
0.26	14	0.76	39	1.36	64	2.37	89
0.28	15	0.78	40	1.39	65	2.44	90
0.30	16	0.80	41	1.42	66	2.52	91
0.32	17	0.82	42	1.45	67	2.60	92
0.34	18	0.84	43	1.48	68	2.69	93
0.36	19	0.86	44	1.51	69	2.78	94
0.38	20	0.89	45	1.54	70	2.91	95
0.40	21	0.91	46	1.57	71	3.04	96
0.41	22	0.93	47	1.60	72	3.22	97
0.43	23	0.95	48	1.64	73	3 45	98
0.45	24	0.98	49	1.67	74	3.82	99
0.47	25	1.00	50	1.71	75		

Digitized by Google

The Chance of Hitting a Target.—The applications of Chauvenet's Table of Probability to the study of the effect of the fire of guns are very useful. The table in its present form was first proposed by Professor Chauvenet, and his exposition of it will be found at page 488, volume II of his Astronomy. There is also given on page 490 an application of the table, its accordance with facts being tested by an application to a series of 470 angle readings in a manner which it would be most interesting to repeat for gun practice. An exposition of the table is also given in Merriman's Least Squares. In the table, the *factor* is the number arising when the distance from the centre of impact to one edge of the target is divided by the probable error of the gun, and the *per cent* corresponding is twice the per cent of shots which will fall on the target, or is the per cent which will fall on it if the centre of impact is adjusted to its middle.

EXAMPLES.

1. What chance is there of striking the broadside of a ship 300 feet long and 30 feet high, at 1000 yards, with any shot aimed at it?

Suppose that the probable vertical and side errors are 4 and 6 yards, respectively, and that the officer directing the fire is so skillful that he has adjusted the centre of impact to the centre of area of the target. Then the vertical factor is

$$\frac{15}{4 \times 3} = 1.25,$$

and the per cent corresponding by the table is 60. Therefore, since the ship is so long as to catch all shot so far as side errors are concerned, the chance of any shot hitting is $\frac{60}{100}$, or we may expect to put $\frac{3}{5}$ of the shots fired into the target.

2. Suppose the officer directing the fire has adjusted the centre of impact at the centre of the length of the water line of the target described in Example 1, what is the chance of hitting?

The vertical factor is

$$\frac{30}{4 \times 3} = 2.5,$$

and the per cent corresponding in the table is 91. Since, however, the shots are as likely to go below as above, one-half of them will be lost, and the chance of hitting with any shot will be

$$\frac{1}{2} \times \frac{91}{100} = \frac{45}{100}.$$

In this case, however, we would get some ricochet hits.

Digitized by Google

3. Suppose the centre of impact is at any corner of the target described in Example 1. Here a vertical belt of the height given and very long both ways from the centre of impact would catch, as in Example 2, $\frac{45}{100}$ of the shots; but since the centre of impact is at the corner of a long target, we shall lose one-half of the above. Thus the chance of hitting with any shot is

$$\frac{1}{2} \times \frac{45}{100} = \frac{22}{100},$$

or we may expect about one-quarter of the shots to hit the target.

4. Suppose that the fire is directed at a raft 100 feet long and 25 feet wide, its length being in the direction of the range; what is the chance of striking it at 1000 yards with guns whose probable errors are 75 and 6 yards?

Suppose that the centre of impact is at the centre of the target. The range factor is

$$\frac{50}{75 \times 3} = 0.22,$$

and therefore the target, if very wide, would catch 12 per cent of the shots fired. To find what per cent it would catch if very long, we have for the side factor

$$\frac{12.5}{6 \times 3} = 0.69,$$

and the per cent corresponding is 36. Thus the area which is common to these two belts, which is the target, would contain

$$\frac{12}{100} \times \frac{36}{100} = \frac{4}{100}$$

of the total number of shots fired.

5. Suppose that, under the circumstances described in Example 4, the centre of impact was 100 yards short of the centre of the raft and on the line of its edge prolonged, as shown in the diagram; how many shots will strike the raft?

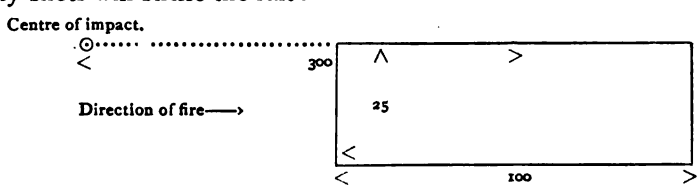

Find the number of shot that will fall in a very wide band (300 + 50) feet across, and subtract from this those which will fall in a very wide

Digitized by Google

band (300 — 50) feet across; the side errors should be treated in the manner already exemplified. Thus

$$\frac{350}{75 \times 3} = 1.56,$$

and the per cent corresponding is 71;

$$\frac{250}{75 \times 3} = 1.11,$$

and the per cent corresponding is 55. Therefore

$$\tfrac{1}{2}(71 - 55) = 8 \text{ per cent}$$

of the shots would fall on the target if very wide.

For the side factor,

$$\frac{25}{6 \times 3} = 1.39,$$

and the per cent corresponding is 65. Therefore

$$\frac{8}{100} \times \frac{65}{100} \times \frac{1}{2} = 0.03,$$

about, of the shots would fall on the target. In other words, it would be almost useless, unless the skill of the gunnery officer can be improved, to fire, under circumstances of sea and wind such as to prevent a better adjustment of the centre of impact than that here supposed.

6. Suppose, now, without altering anything else, that the skill of the gun-captains in the case of Example 5 increases so that the probable errors are reduced one-half. The probable range error is then 38 yards, and the probable side error 3 yards.

It will be found that

$$\frac{10}{100} \times \frac{1}{2} \times \frac{94}{100} \times \frac{1}{2} = 0.02$$

of the shots may be expected to strike the target. Thus the very greatly increased skill of the men will result in nothing unless the skill of the officers improves also. Indeed, unless the fire of guns can be accurately adjusted, an increase in the skill of the men aiming may be detrimental.

7. Suppose that a torpedo boat, 100 feet long and 4 feet high, is fired at as she steams by at 300 yards distance; the probable vertical and side errors being one yard each; and that the centre of impact of the fire delivered is 25 feet astern of her and 16 feet above her rail, as shown below; find what fraction of shot will be likely to hit her.

Digitized by Google

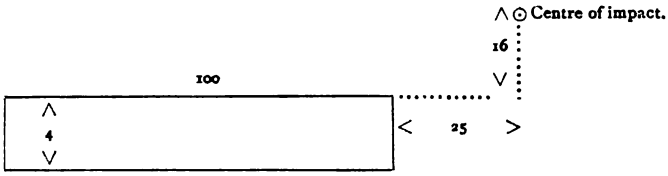

It will be found that all the shots will go above and astern of her.

Suppose that the centre of impact is at the centre of the boat's area. It will be found that, in this case, about 35 per cent of the shots may be expected to strike.

8. The probable errors taken in Example 7 being small, considering the circumstances under which such fire may occur; to find what per cent of hits we may expect when the probable vertical and probable side errors are 2 and 3 yards, respectively.

(1). When the centre of impact is in the position first described, we may expect

$$\frac{4}{100} \times \frac{1}{2} \times \frac{6}{100} \times \frac{1}{2} = .0006$$

of the shots to strike. Though this is a little better showing than with the smaller probable errors, it is evidently still useless to fire.

(2). When the centre of impact is at the centre of the target we may expect

$$\frac{17.5}{100} \times \frac{100}{100} = 0.18,$$

about, of the shots to hit.

9. The probable vertical and side errors of a rapid-fire gun being 1 yard each, see whether it is better, with respect to putting a shot into either of the ports of a monitor indifferently, to fire at the centre of the area between them, or at the centre of one of the ports. The ports are four feet high, three feet wide, and they are four feet apart, as shown in the diagram; the ports being supposed rectangular and in

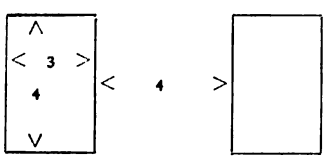

one plane. If the centre of impact is correctly adjusted to the centre of the area between, the fraction of hits which may be expected is

$$\frac{74 - 35}{100} \times \frac{35}{100} = 0.14.$$

Digitized by Google

If it is correctly adjusted to the centre of one port, the fraction of hits which may be expected is

$$\frac{35}{100}\left[\frac{26.5}{100}+\frac{1}{2}\left(\frac{94-78}{100}\right)\right]=0.12.$$

There is therefore practically no difference in the number of hits to be expected.

10. A torpedo boat, 100 feet long, steaming at a speed of 25 knots, is crossing the line of fire at a distance of 500 yards; to estimate approximately the loss in effect of the fire of the rapid-fire guns by failing to apply to their sight notches a correction for the boat's speed.

The boat will move one-half her length in just about one second; since this is also about the time of flight, the centre of impact will be displaced to the boat's stern-post, and one-half of the hits will be lost.

11. Suppose we say that n hits from the rapid-fire guns will stop a torpedo boat as she approaches from 1500 to 500 yards range at a speed of 25 knots, presenting a target which is equivalent to a vertical one 4 feet high and 8 feet wide; how many of these guns will probably be needed to stop her?

She will be under fire about one minute, and it is assumed that each gun can fire 10 carefully aimed shell in this time. The average of the probable vertical and side errors of the 6-pounder gun at 1500 and at 500 yards are 0.4 and 0.3 yard, respectively.

Therefore, if the fire is adjusted to the centre of the target, these errors would give

$$\frac{74}{100}\times\frac{100}{100}=0.74$$

of hits. Thus, allowing some margin for safety, we may say that the number of guns required is $\frac{1}{7}\,n$.

Now suppose, since the circumstances under which the guns will be used are far less favorable to accuracy than those at the proof grounds, where these errors were determined, that we increase the errors three-fold, making them 1.2 and 0.9 yards, respectively. Then the fraction of hits which we may expect is

$$\frac{29.5}{100}\times\frac{68}{100}=0.20,$$

which gives $\frac{1}{5}\,n$ as the number of guns which should be provided. If, for example, the number of hits required to stop the torpedo boat is 4, the smaller errors indicate that one gun could handle two boats; while, with the larger ones, we must have two guns for each boat.

Digitized by Google

12. To ascertain approximately what limit of error in the sight-bar height should be tolerated in practice; or, what is the smallest change we should ever apply to the sight bar when it is in use.

Of course, if there is ample time and plenty of ammunition, the closer the centre of impact is adjusted, the more hits we shall get; but in practice there are always considerations which indicate that changes of sight bar should be vigorous. This example is intended to discover a limit within which it will rarely be useful to correct the adjustment of the bar.

The probable vertical error will be denoted by v, the probable range error by r, and it will be supposed that the vitals of the ship attacked are contained in a belt extending upward from the water line and nv in width, n being a number, either whole or fractional. The per cent of shots which will fall on the target, if the fire is adjusted to its centre, may be denoted by

$$P\left(\frac{nv}{2}\,\frac{1}{v}\right)=P\left(\frac{n}{2}\right),$$

this symbol meaning the tabular per cent corresponding to the factor $\frac{n}{2}$. If, now, the range is changed by m times the probable error r, the centre of impact will be displaced through mv, and the per cent of hits becomes

$$\frac{1}{2}\left[P\left(\frac{n-2m}{2}\right)+P\left(\frac{n+2m}{2}\right)\right].$$

The per cent of hits lost is therefore

$$\Delta P=P\left(\frac{n}{2}\right)-\frac{1}{2}\left[P\left(\frac{n-2m}{2}\right)+P\left(\frac{n+2m}{2}\right)\right].$$

This expression shows that if we assign some value to ΔP as the greatest per cent of hits we can afford to lose, that m depends upon n. If, for example, $\Delta P=1$ and $n=3$, which will not infrequently be about the case in practice, we find $m=\frac{1}{3}$, about; or, to secure an adjustment which shall lose only 1 per cent of hits with this target, we must adjust the bar to within $\frac{1}{3}$ of the probable error. The probable range error in ordinary practice at sea at 1000 yards range will be about 50 yards; it follows then, from the above calculation, that we may safely put $\frac{50}{3}=17$ yards as the limit sought.

It will also be found that, when $\Delta P=2$ and $n=3$, $m=\frac{1}{2}$, about; or that we can lose only 2 per cent if we limit the changes of sight bar to 25 yards. The length of sight bar which corresponds to a

Digitized by Google

change of range of 25 yards is, with the 6-inch B. L. R. at about 1000 yards range, only .03 inch. With the probable errors taken, the height of the target, *nv*, is 36 feet.

13. The length of the sight bar of the 6-inch B. L. R. which corresponds to a change of range of 100 yards is, at 1000 yards, .103 inch. Assuming the probable errors just given as those which will occur with this gun at sea, and taking $n = 3$, or supposing the target to be 36 feet high, find what loss may be incurred by laying down the rule that the bar must always be moved by increments of 100 yards. We have, then, $n = 3$ and $m = 2$; therefore

$$\Delta P = 68.5 - 35.8 = 32.7.$$

This is too large a fraction of hits to lose. If the least count of the bar is 50 yards, or $m = 1$,

$$\Delta P = 10, \text{ about.}$$

14. To find how many shots will hit targets of 10, 15, and 20 feet height, when placed at 500, 1000, and 1500 yards; the probable vertical error taken being 6 feet at 1000 yards, and it being assumed to vary uniformly with the range throughout the limits considered. This assumption will be found to be very nearly true in practice.

Height of target, 10 feet.

Distance.	Hits, per. cent.	Short, per cent.	Short, nearest tenth.
500 yards,	74	14	1
1000 yards,	42	29	3
1500 yards,	29	35	4

Height of target, 15 feet.

Distance.	Hits, per cent.	Short, per cent.	Short, nearest tenth.
500 yards,	91	4	...
1000 yards,	60	20	2
1500 yards,	42	29	3

Height of target, 20 feet.

Distance.	Hits, per cent.	Short, per cent.	Short, nearest tenth.
500 yards,	98	1	...
1000 yards,	74	13	1
1500 yards,	55	22	2

15. After the correct adjustment of the fire of a heavy battery of guns to a point, it is sometimes required to *spread the fire:* to

Digitized by Google

ascertain what horizontal distance should separate the points at which the guns are pointed in order that the fire shall be uniformly spread.

The form of the curve of probability and the table show that the fire will be nearly uniformly distributed if the distance is about four times the probable side error. Taking this as 5 yards when firing at 1000 yards under ordinary circumstances of sea, it follows that the guns should be directed at points above 20 yards, or 60 feet apart—say 70 feet—in order that there shall be no spaces not well covered by the fire.

16. Two fleets, having the same number of ships in each, are approaching bow to bow at a speed of 9 knots each. They fire simultaneously, and for the first time, when 2000 yards apart, and continue to fire, each ship at the rate of 1 gun per minute, until they have passed through each other. The fire is adjusted to the centre of the vertical target presented by the enemy's ship, which is 20 feet high by 40 feet wide. Find the chance that any ship will be struck; taking the probable vertical and side errors at 12 and 24 feet, respectively, at 1000 yards—and assuming them to vary uniformly with the range.

The distance between the ships will be shortened by about 600 yards per minute, and the solution of the problem is contained in the following tabular statement:

Distance.	Probable errors. Vertical. Ft.	Side. Ft.	Chance of hitting.
2000 yards,	24	48	.05
1400 yards,	17	34	.10
800 yards,	9	19	.30
200 yards,	2	5	1.00

17. A Hotchkiss 6-pounder fires eight well aimed shells per minute. Its probable vertical and side errors at 1000 yards being 3 feet each (three times the errors of the proof grounds), find how long it will probably take for it to put a shell into a gun-port 4 feet high by 2 feet wide.

The chance of hitting with one shot is .06, therefore the chance of missing with one shot is $1 - .06 = .94$, and the chance of missing with n consecutive shots $(.94)^n$. The chance of not missing with n consecutive shots, that is, of hitting once at least, is $1 - (.94)^n$. If, now, we put this equal to some large fraction, and write $n = 8m$, we have

$$.98 = 1 - (.94)^{8m}.$$

Digitized by Google

Whence we find $m = 7.9$, about; or we may expect to get a shot in 8 minutes, about.

The Regulation of Fire.—The final adjustment of the fire of guns to any target should be made by corrections of the range used, based upon the observation of the points of fall of the projectiles. In the case of fire against fixed targets, this may be done with great nicety; but the exact method to be pursued, which should be the one which will give the desired adjustment most quickly, evidently admits of great variety. To this we shall come presently. Even when a target is moving rapidly, the points of fall of projectiles must be carefully noted, and these must furnish a guide to the officers controlling the fire. It is convenient to recollect that, for any given adjustment of the sights with particular ammunition, there is a *mean* trajectory which passes through the centre of impact, and that the area over which the projectile *may* strike, under the stated conditions of firing, is an ellipse (or a rectangle) whose semi-axes are respectively 4 times the probable range (or vertical) and side errors, having its centre at the centre of impact for the actual adjustment. To quickly bring the centre of impact to the centre of the target is the object of the regulation of fire. The chance that the centre lies beyond the point struck by any single shot is $\frac{1}{2}$, and that it lies short is also $\frac{1}{2}$. The chance that it lies either short or beyond any two shots is $\frac{1}{2^2} = \frac{1}{4}$.

The Establishment of a Fork.—In all services where it is customary to regulate the fire of guns by the observation of the points of fall of projectiles, in a manner similar to that laid down in the Rules of Fire, given further on, it is customary to establish first, and by the observation of the points of fall of single projectiles, a *fork*—to throw one shot beyond and one short of a target, thus enclosing it. It is obvious that we may thus reach a first and rough approximation to the correct range to be used, and may then base the finer adjustment upon an observation of the fall of a larger number of projectiles. There are two methods commonly stated, and which will naturally present themselves, of fixing the fork. The first is called the method of *successive means*, and consists in—having observed that the first shot fell short, say—increasing the range vigorously for the second shot, so as to be sure of going beyond for the next shot; then using the mean of these two enclosing the target

Digitized by Google

for the third shot, and so on, thus continually narrowing the fork. The second method, the *progressive* method, consists in dropping the first shot short (usually), and then feeling the way up to the target with successive increments (or decrements) of range until the target is, as before, enclosed in a fork. It is evident that a study of the accuracy of guns will enable us (1) to estimate judiciously the change of range proper in either the progressive method or in that of successive means, and (2) to estimate the degree of smallness within which it will not be well to contract the fork—the magnitude of the changes which we may base upon an observation of the fall of single projectiles. Suppose, for example, we have fired a shot at a target whose range is unknown, and have observed it to fall short. The chance that the *centre of impact* is beyond the point struck is $\frac{1}{2}$, and thus it is possible that the range should be increased; the fact being that, as the centre of impact is equally likely to be short or beyond the point struck, the probability that the range should be increased is greater than $\frac{1}{2}$. Further than this we cannot go with the knowledge at hand. If we know by how much the shot was short of the target, and know also the gun's probable range error, we can better estimate the advisability of an increase of range; but not otherwise. If a second shot, fired under identical circumstances, also falls short, the chance that the centre of impact is beyond the target—the chance that we shall err in increasing the range—cannot be greater than $\frac{1}{2^2} = \frac{1}{4}$. And, generally, if n shot go all beyond or all short of a target, the chance that they are all beyond or all short of the centre of impact, or the chance that the range does not need correction, is $\frac{1}{2^n}$. Evidently, our reasoning, which has been applied to one person firing n shots, may be extended to n guns firing one shot each; or to any number n of shots, however they are fired, provided that the personal errors of the individuals firing the guns have been removed, so that their centres of impact may be superposed.

Group Firing to finally Adjust the Range.—If we had fired three shots, then, and they had all fallen short of a target, we should know that the chance that the centre of impact lay beyond the points struck, or on the same side of them as the target, was $\frac{1}{2^3} = \frac{1}{8}$. Thus it is a wager of 7 to 1 that we should increase the range; but, it must be noted, the facts observed furnish very little clue as to the *magnitude* of the correction, though its *sense* is sufficiently well ascer-

Digitized by Google

tained. When the fork is established as described, it is usual to resort to firing six or eight shots rapidly, and observing how many of them fall short. This, if the height of the target is known, furnishes a method of adjusting the centre of impact exactly to the centre of the target's height; but, from our imperfect knowledge of the height of the targets, it is usual, in the group firing, to require that the number of shots which fall short shall be some simple and easily calculated fraction of the whole number fired. The larger the number of shots thus fired in a group, or in fairly rapid succession, as here laid down, the more certain we shall be of the correctness of our deductions from the observation of the points of fall; but, generally speaking, six or eight shots thus fired will be enough. In Rule 4 of the Rules of Fire of Shot or Shell against a Fixed Target, the number of shots to be fired is laid down at six to eight, and it is prescribed that the fire shall be considered regulated if the fraction of shots which fall short lies between $\frac{1}{2}$ and $\frac{1}{4}$.

The Exact Correction to be Applied to the Range Ascertained by Chauvenet's Table.—The tentative process of keeping some suitably chosen fraction of all the shots fired short of the target is the one which must be adopted in practice; but the table will furnish the exact correction to be applied, having given the fraction which are falling short. Suppose in the diagram that the target is at

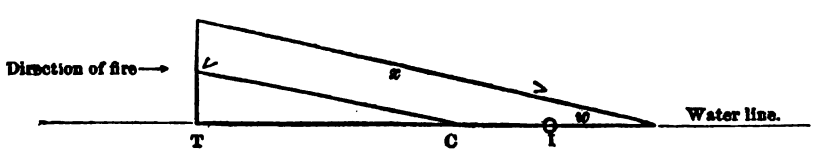

T. Projecting it into the horizontal plane by multiplying its height by the cotangent of the angle of fall, its centre will fall at the point C; and CT = one-half the dangerous space for the target. The centre of impact will fall at some point I, whose position we wish to determine; and, if a per cent of the shots have fallen short, it follows that $(50 - a)$ per cent have fallen on a band of width TI, or $(100 - 2a)$ on a band of twice this width, if I is in its centre line. Suppose s is the numerical value of the factor in the table corresponding to $(100 - 2a)$ per cent, r the probable range error of the gun, and TI $= x$; then

$$x = sr.$$

Digitized by Google

Therefore $(TC - x)$ is the correction in yards, the probable error having been taken in yards, which should be applied to the sight bar.

The sight bar might also be corrected by considering the vertical change of position which the centre of impact should undergo; since it may be shown that with small angles of departure, a change of $\frac{1}{15}°$ in this angle changes the vertical position of the point struck in a vertical target by about $\frac{1}{1000}$ of the distance of the target.* Since, however, we usually have ranges and not angles in our minds, when using guns at sea, the first method is preferable. It is evident that we may also, by independently counting the fraction of the shots which go to the right (say), bring the centre of impact sideways to the central vertical line of the target; but, from the nature of targets at sea, it is not usually necessary to use this process, though it might become very necessary in the case of a strong cross wind.

Examples.

1. Suppose that a battery of guns whose probable range error is 75 yards at 1000 yards is firing at a target 15 feet high at that distance; it being observed that $\frac{4}{16}$ (a correction of this nature should not be applied after the observation of a small number of shots only) of the shot fall short, what correction should be applied to the sight bar? The angle of fall is 3°.

In the diagram,

$$TC = \tfrac{1}{2} \times 15 \times \cot 3° = 143 \text{ feet.}$$

Corresponding to $(100 - 50)$ per cent, we find $s = 1$; therefore

$$x = 1 \times 75 = 75 \text{ yards;}$$

and the correction to be applied is

$$48 - 75 = -27 \text{ yards.}$$

It would be useless, with guns of the probable error assumed, to make this correction, unless it were based upon the observation of a very considerable number of shots.

2. Suppose, in the example above, $\frac{1}{16}$ of the shot have fallen short. Corresponding to $(100 - 12.5)$ per cent, we find $s = 2.27$; therefore

$$2.27 \times 75 = 170 \text{ yards.}$$

The correction to be applied is then

$$48 - 170 = -122 \text{ yards.}$$

* This will be shown hereafter under the heading, The Changes on a Vertical Target due to Small Changes of the Angle of Departure.

Digitized by Google

3. Suppose that a battery of guns whose probable range error is 50 yards at 700 yards range is firing at a target 30 feet high at that distance, and that $\frac{1}{2}$ of the shot fall short. The angle of fall being $2° 30'$, to find what correction should be applied to the sight bar.

As before,

$$TC = \tfrac{1}{2} \times 30 \times \cot 2° 30' = 343 \text{ feet.}$$

In this case the centre of impact is short of the target, and corresponding to (125 — 100) per cent, we find $s = .47$; therefore

$$x = .47 \times 50 = 24 \text{ yards;}$$

and the correction to be applied is

$$114 + 24 = 138 \text{ yards.}$$

The Side Adjustment of the Centre of Impact.—The treatment of the subject of the regulation of fire, as thus far laid down, has referred formally to its regulation so far as the range or vertical coordinate of the centre of impact is concerned, but the adjustment of its side position differs in no way from the former, evidently. The sideways position of the centre of impact, from the large margin which the ratio of the sideways dimensions of targets to the side errors of guns gives us, is never so important a matter as its other coordinate. And, besides, because an officer controlling the fire of guns can correctly observe the side fall of projectiles fired from guns under him only, the side adjustment must be left to the officers of division, and the number of shots upon which their corrections are based is usually small. Thus the nature of the side corrections must approximate more or less to the corrections used in the establishment of the range fork, prior to the group firing. In Rule 4 of the General Rules under the Rules of Fire it is laid down that the divisional officers shall correct the side position of the sight notch, and that they shall make no correction unless the observed error shall have exceeded the probable side error of the gun. The probability that the sense of the correction required by the rule is in error is one-fourth.

The Manner in which Crack Shots use their Trial Shot.—In shooting matches with shoulder rifles, beyond certain ranges, it is customary to allow one or more trial shots, and these are commonly used as follows: The bull's-eye of the target is of such a size that the marksman knows that, so far as his skill goes, he can put all, or very nearly all, the shots he fires into it. This he can do

Digitized by Google

if his ammunition and sights are right. If, then, he is telegraphed after firing his trial shot that it struck at such a point, he applies a correction to the position of the sight notch, both laterally and vertically, which will bring his next shot to the bull's-eye. To make his process logical and sound three things are necessary: (1) he must know the magnitude of his proper error—must know on how large a surface he can put all his shot; (2) he must know the magnitude and sense of the errors of his trial shot, and they must be greater than the ordinary value of his proper error; and (3) he must be sure that his subsequent shots are fired under conditions identical with those of the trial shot.

The Changes on a Vertical Target due to Small Changes in the Angle of Departure.—It is often convenient in the use of guns, as, for example, in the method of adjusting the fire by trial shots just described, to have the means of correcting angles of departure by the amount necessary to change the position of the point of mean impact. The method given is based upon the laws governing the flight of projectiles when unresisted, and is therefore defective; but, since we do not know the form of the trajectory in air, we may adopt the result reached by considering the motion unresisted, while recollecting that it should be applied only when the range is short. We have, from the diagram,

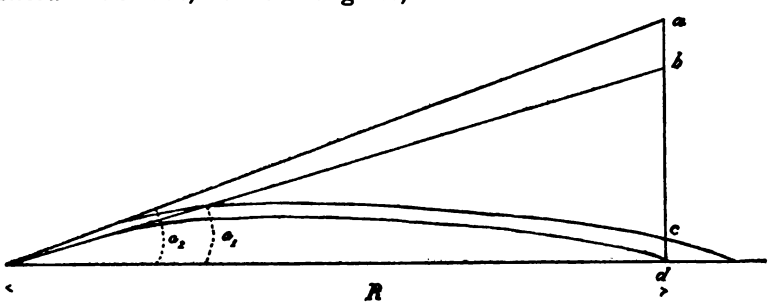

$$\tan \alpha_2 = \frac{ad}{R}, \text{ and } \tan \alpha_1 = \frac{bd}{R}.$$

Therefore

$$\tan (\alpha_2 - \alpha_1) = \tan \delta\alpha = \frac{\dfrac{ad - bd}{R}}{1 + \tan \alpha_2 . \tan \alpha_1},$$

or

$$\tan \delta\alpha = \frac{ab}{R} \cdot \frac{1}{1 + \tan \alpha_2 . \tan \alpha_1}.$$

Digitized by Google

Or, if we neglect quantities of the order $\tan \alpha_2 . \tan \alpha_1$,

$$\tan \delta\alpha = \frac{ab}{R}.$$

We have also,

$$\text{time over upper trajectory, } T_2 = \frac{R}{V.\cos \alpha_2},$$

$$\text{time over lower trajectory, } T_1 = \frac{R}{V.\cos \alpha_1}.$$

Hence $ac = \frac{g}{2} . \frac{R^2}{V^2.\cos^2\alpha_2}$, and $bd = \frac{g}{2} . \frac{R^2}{V^2.\cos^2\alpha_1}$.

Therefore

$$ac - bd = \frac{gR^2}{2V^2}(\sec^2 \alpha_2 - \sec^2 \alpha_1) = \frac{gR^2}{2V^2}(\tan^2 \alpha_2 - \tan^2 \alpha_1).$$

If we neglect the squares of tangents, as before,

$$ac - bd = 0, \text{ or } ab = cd,$$

and therefore $$\tan \delta\alpha = \frac{cd}{R}.$$

If, here, $\delta\alpha = 4' = \frac{1}{15}°$, $cd = \frac{R}{1000}$, nearly.

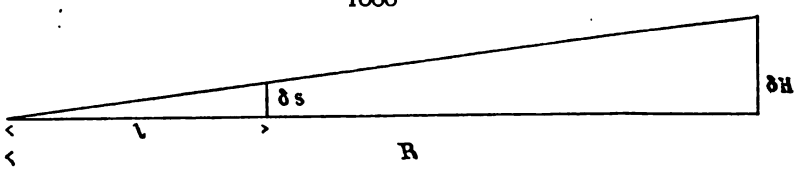

The connection between small changes in angles of departure and consequent changes in the points struck—or, to speak in a more practical sense, the consequent changes in the height of the centre of impact due to any adjustment of the sight bar—may be established by means of similar triangles formed by the lines of sight in the two cases. In the diagram, δs is the change of height of sight point due to any assigned change of angle, δH the change of height of centre of impact corresponding, R the actual range, and l the sight radius. Then we have

$$\delta H = \frac{R}{l} \delta s.$$

Since $\delta s = \delta\alpha . l$, and because $\delta\alpha$ is supposed small, this expression agrees with the former one, while it has the advantage of being much more easily derived. We have already seen how the great shots make use of their trial shots, by means of formulae thus derived, to

Digitized by Google

correct the position of their points of impact. The rule connecting the changes here referred to is, however, an important one to have at hand always; it is largely used by the Prussian field artillery, one of the best organized and instructed services in the world.

Rules of Fire.—The rules of fire are the rules by which the machinery operating a battery of guns is governed. The machinery referred to is made up of the officers and other persons having to do with the battery, and of the various apparatus by which they communicate with each other. Our first step in rendering the fire of a ship fully efficient would be to drill the gun's crews separately until each was capable of making a good target—of putting a large number of shot on a small area in a given time—and to instruct officers and men in every part of the principles and practice of gunnery which will help them in the discharge of their particular duties; and, after this has been done, we pass to the drill of the battery of the ship as a whole. In the same way, the drill of a boat's crew at pulling precedes the drill of all the ship's boats at squadron evolutions, and the school of the soldier the school of the company. The Rules of Fire are, then, a sort of skeleton drill for the battery. They lay down rules defining the responsibilities and duties of different persons, and attempt also to supply simple and easily remembered rules which shall ensure a quick adjustment of the centre of impact of the fire delivered, to the centre of the target.

General Rules.—1. The gunnery officer, conveniently stationed aloft, shall, under the direction of the commanding officer, control the fire.

2. The officers of divisions shall repeat all orders given by the gunnery officer, and shall see that they are executed.

3. The range ordered by the gunnery officer shall be used exactly as ordered by him, except as follows: He shall estimate whether the pointing will be coarse, medium, or fine, and the divisional officers shall see that, according to which he prescribes it, the sight bars of guns under their command are lowered ½ inch, ¼ inch, or 0 inch, respectively. In case all the guns firing are the same, the gunnery officer shall himself apply this correction before ordering the range.

4. The lateral position of the sight notch, to compensate for speed of gun and target and for wind, shall be directed by the gunnery officer. The junior officers of divisions shall take station near or over guns about to fire, and shall subsequently adjust the lateral

Digitized by Google

position of the sight notches of these guns by the observation of where the shots fall laterally. These officers shall apply the correction which will just cause the observed error to disappear, provided it shall have exceeded the probable error of the gun. If it shall have been less than this, no correction shall be applied.

5. Unless otherwise ordered, the gun-captains shall aim at the centre of the length of the water line of the target. In special cases, special orders shall be given by the gunnery officer as to the point to be aimed at.

6. The gunnery officer may, if authorized to do so by the commanding officer, at any time order the fire to be spread. Special directions must be given to cover particular cases, but in no case shall the fire be directed at any bounding line of the target except its water line, nor shall the fire of any gun be directed at an isolated target whose dimensions are less than the actual probable errors.

7. The guns shall always be fired at the end of the roll towards the target; but this rule shall not be so interpreted as to cause any material delay.

8. The correct position of the sight notch and elevating gear shall be ascertained by the second captain just before each fire.

9. In no case shall an alteration in the position of the sight notch be based upon an observation of the fall of the shot which has been uncertain. All uncertain observations must be counted as lost for purposes of correction.

10. Fire will be delivered either successively, or at will. Unless the latter is specially ordered, the fire shall be delivered in succession.

11. With respect to its celerity, two classes of successive fire will be recognized—slow and rapid. With the former, the interval between the firing of two guns shall not be less than ten seconds; and with the latter, the interval shall not be less than five seconds.

12. When commencing to fire in succession, the fire shall begin aft or forward, according to whether the ship is head or stern to wind. When all the guns of the battery have fired once, the gun which commenced shall fire next, and so on continuously.

13. Fire at will may be ordered to be either slow or rapid. In the former case the fire will be delivered diligently, but not so fast as to unduly fatigue the gun's crews; in the latter case, it will be delivered with the utmost rapidity that careful pointing will admit of.

Digitized by Google

Fire of Shot or Percussion Shell against a Fixed Target.—1. If there is a horizon, so that Buckner's method is available, or if the height of the enemy's mast is known, the distance shall be found by one of these methods; and the order being given by the gunnery officer to set the sight notch in the proper position, he shall, when the captain orders fire to be opened, order the fire in succession from either forward or aft.

2. If neither of the above methods is available, the gunnery officer will, when fire is ordered, estimate the distance by such methods as his experience has taught him, and will order fire in succession from either forward or aft at a range so estimated. According to whether the first shot falls short or beyond, the range for the second shot will be increased or decreased by 150 yards. If the second shot, so fired, falls on the opposite side of the target from that on which the first fell, the fire shall proceed as in Rule 3; if it does not, the gunnery officer shall change the range progressively for successive shots by 150 yards until the target is included between two shots.

3. The range being ascertained by the methods of either Rule 1 or 2, the fire will be directed to proceed rapidly at the range established by Rule 1, or at the mean of the two ranges of Rule 2.

4. A number of shots (about six or eight when there are as many guns engaged) will then be fired as laid down in Rule 3, and the fraction of them which fall short will be counted. If this fraction is less than one-fourth, the range shall be diminished by 50 yards. If it is between one-fourth and one-half, the fire shall be considered regulated. If it is greater than one-half, the range shall be increased by 50 yards.

5. At shorter ranges—500 to 700 yards—or with large targets, the fraction one-fourth in Rule 4 shall be changed to one-sixth, and to one-eighth at very short ranges or with very large targets.

6. If, of the groups of shots fired as in Rule 4, the first three are all short or all beyond, the gunnery officer shall at once order the range increased or decreased by 50 yards.

7. The gunnery officer shall closely watch the fall of the shot, fixing his attention on the fraction short, and having regard to the direct hits also, when these can be clearly seen, and shall keep this fraction always between the limits laid down in Rule 5. If the fire shall have been well regulated, and a subsequent change of position small, the range may, for its very accurate adjustment, be changed by 25 instead of 50 yards.

8. After the fire has been regulated, the gunnery officer may, if so

Digitized by Google

directed by the captain, order time shell to be used; and shall, in all such cases, prescribe the length of burning to which the fuzes are to be adjusted.

Fire of Shot or Percussion Shell against a Moving Target.—1. If the relative motion of the ship and target be such as not to change the range rapidly, the fire may be controlled as though the target were fixed, so far as laid down in Rule 2, previously given. After this, if the ship and target are approaching, the gunnery officer shall open fire slowly with the secondary battery at the lesser range of the two including the target, and, when the first shot falls beyond, shall order rapid fire at will by all the guns.

2. In case the distance is changing rapidly, the gunnery officer shall, when the captain orders fire to be opened, open fire with three or four guns of the secondary battery at such a range as will cause the shot to fall short. If the ship and target are approaching, this range may be slowly increased, the whole battery keeping carefully trained on the target with the same range; at the instant when the first shot from the secondary battery falls beyond, the gunnery officer will order the whole battery to fire rapidly at will together.

3. If the ship and target are separating, the distance, chosen as in Rule 2 for guns of the secondary battery, shall be more rapidly increased, the whole battery meanwhile keeping trained at the same range as that in use by the secondary battery. When the first shot from the secondary battery falls beyond, the gunnery officer will give the order to fire the whole battery rapidly at will together.

4. In any case when the ship or target is moving, and the distance can be ascertained by Buckner's method, or by any other method of triangulation, the battery may fire at will at a range so ascertained.

Fire of Shrapnel or Time Shell.—1. If the fire be at a fixed target, the range shall first be ascertained by shot or percussion-shell fire. To pass to shrapnel fire, it is necessary only to diminish the range by 25 or 50 yards, and to cut the fuze so that the shrapnel will burst about 50 yards short of the place where it would strike the water; to pass to shell fire, to cut the fuze so that it will burst at the target.

2. When shrapnel fire is begun as in Rule 1, the interval must be carefully noted by the gunnery officer, and adjusted, by altering the length of burning, to the value there laid down.

3. If the target is moving, and the distance can be ascertained by

Digitized by Google

angle, an effective discharge of shrapnel might be had by setting the sight bars and cutting the fuzes for some range less than (or greater, according to how the range was changing) the actual range; and, the target being closely followed by all the guns, by ordering rapid fire together at will when the range for which the guns are laid is reached.

4. If a part of the battery is used with shot or percussion shell, according to rules already laid down, the other part might be effectively used with time shell or shrapnel.

Explanation of the Rules.—The formal division of the above rules into several classes comprising certain general rules applicable in all cases, and other systems governing the control of the fire according as it is with or without time fuzes, and according as the target is moving or stationary, is obviously necessary. We cannot regulate the fire of time shell, unless their time of bursting is adjusted to be considerably longer than their time of flight, in the same way that we regulate the fire of percussion shell or shot; nor can the methods of controlling fire at a fixed and moving target be the same. Those of the rules which appear to require it will now be explained.

General Rules.—Rule 3. According as the circumstances of light and of roll differ—but particularly the last—the degree of coarseness of the sight taken must increase. The rule is intended to take account of this. Experiment may show that the changes in the position of the sight notch recommended are erroneous in magnitude.

Rule 4. The correction of the position of the side position of the notch, based upon a single shot, should not take place unless the distance from the target to the point of impact exceeds the probable side error of the gun. Because, if it has not, the chance that the sense of the change applied is correct is not necessarily greater than one-half.

Rule 6. The reasons for this, and the method that should be followed, are shown in Example 15, under Chauvenet's table.

Rule 7. This rule is adopted because it causes a small advantage as to slightness of recoil, and because the angular velocity of roll will be zero.

Rule 11. These intervals are necessary in order to give the gunnery officer time to change the range, if he wishes to do so. They would also depend in some measure upon the number of guns firing; it being desirable to have the fire delivered continuously, if possible.

Digitized by Google

Fire of Shot or Shell against a Fixed Target.—Rule 2. The increment (or decrement) of the range of 150 yards, while establishing the fork by the progressive method, has been founded on an assumed probable error of 100 yards in the distance estimation and a probable range error of 50 yards. These refer to ranges of about 1000 yards; but it is clear that the application of the rules founded on them may be extended to ranges somewhat greater or less than 1000 yards, without material error. These errors being admitted, it follows that the chance of including the target between the first two shots is good, while the chance of including it upon the third shot is practically certainty.

Rule 4. The change of range set down here—50 yards—has been reached by a consideration of the fact that the length of sight bar corresponding to a change of range of 50 yards is, for medium guns, and with targets at 1000 yards distance, only about $\frac{1}{10}$ inch; and the fractions $\frac{1}{2}$ and $\frac{1}{4}$ from a study of tables showing the per cent of shots caught by targets of varying height.

Fire of Shot or Percussion Shell against a Moving Target.—The reasons for the rules here given will be apparent upon reflection. When a gun is firing with a certain adjustment of the sight notch, the projectiles are falling on an ellipse whose semi-axes are respectively four times the gun's probable range and side errors; and it may be shown that for small targets, and therefore approximately for large ones, the number of shots falling on a fixed area with a fixed intensity of fire are proportional to the numbers 30, 20, and 1, according as this area is at the centre of the ellipse, is at a distance from this point in range equal to the probable range error, or is at four times this distance in range. In other words, with the probable range error of 50 yards which we have adopted, we shall, if we would have 30 hits in a given time with a correct adjustment of the range, have 20 and 1 hits respectively, as we make an error of 50 yards or 200 yards.

The Training of Officers and Men.—Having thus examined, in more or less detail, the question of putting sights on guns, of the attainable degree of accuracy in the use of these, and having provided the outline of a plan of working a ship's battery as a whole, it is important to look a little more particularly into the matter of the training of officers and men. The officers must, of course, be fully acquainted with all things pertaining to the use of guns, and must

Digitized by Google

devote a great deal of attention to all matters of drill and organization, in order that these may be of the most efficient form possible. The training of the crew of a war ship in the use of the battery must begin with that of the gun-captains as marksmen, and that of *single* gun's crews at handling their gun safely and surely under all circumstances. We must train each gun's crew as a unit to make a good target—to group a large number of shot points thickly about the bull's-eye of the target in a short time—before undertaking the training of the battery as a whole. And it will be better that, in the training of single gun's crews, the distance of the target for each shot shall be *accurately* known. As, otherwise, if for instance we attempt to judge of the efficiency of individual crews by noting the position of their shot points when all the guns are firing, we shall probably, from the confusion incident to the firing of a number of guns, and from the difficulty of ascertaining whether the error of a particular shot is due to the gun-captain or to the officer who gave him the distance, be unable to improve the practice to the utmost.

The System of Training in Use in the North Atlantic Squadron.—This system has now been in use for about a year and a half, and has given good results, having very materially bettered the practice of single gun's crews, and having also aroused a great deal of emulation between different ships, because of the direct comparison between them which it institutes. Its description is divided into three parts, plotting target practice, the training of gun's crews, and the training of the battery.

Plotting Target Practice.—As regards small-arm practice, the present method of scoring by means of numbers assigned to concentric circles or ellipses appears to answer every requirement. The paper target used by the army is, however, less expensive and much more transportable than our heavy iron targets.

For plotting the points of fall of the projectiles of the great guns, two plane tables, placed on lines which intersect at right angles at the target, will be very useful in cases where they can be put ashore. But, in the great majority of cases of the target practice of ships on service, this cannot be done; the persons who observe the points of fall must be afloat, and must have an instrument which they can use in this situation. The requirements of the case have led to the use of an instrument not unlike a T-square in appearance, a sketch of which is given below. The open rectangular frame AB, about 22

Digitized by Google

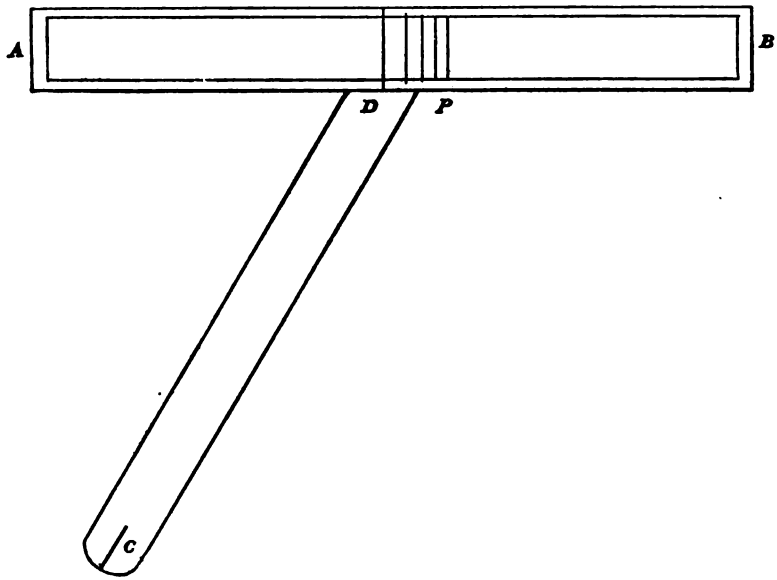

inches long and 2 inches high, has wires in it strung 1° apart; the staff CD is mounted at right angles to the plane of AB, being mortised into one side of it; it should be about 36 inches long. Then, the staff DC being held by the observer with the central wire in AB on the target, and it being observed that a shot has splashed on the wire P, for example, it is known that the shot fell 4° right. Another method which suggests itself, but which would hardly be useful except at a permanent firing station, would be to use stakes in the ground or in shoal water, and either along the line of fire or at some point between it and the position of the observer.

The T's are most conveniently made to a fixed size and with the wires strung 1° apart. The recording the practice of one gun would consist in placing two observers, provided with these instruments, in such positions that they would get a right-angled cut on the target. The position of these observers is perhaps not very important: on the diagram we must know the true relative positions of three points —the target and the two observers. If, as is usually the case, we wish to measure, as accurately as may be, the side and range errors, considered separately, it is best to put one observer right over the gun, and the other one abreast of the target and at right angles to the line drawn from gun to target. For some reasons, however, it is

Digitized by Google

better to put them right and left from the ship, and still more so that they get a right-angled cut on the target. When the ship is steaming about the target, it will, of course, be necessary to have both observers anchored off in boats; but, as has already been to some extent implied, this should never be the case while training men to be marksmen, or while holding trials to ascertain if there has been any falling off in their skill. If there are several guns firing at a target, we need, to complete the record, only an observer on board ship, who shall note the name of the man who fires each shot. In the case of individual practice, however, it will be of advantage to allow only one gun to practice at a time. Similarly, during the practice of the battery, under whatever variety of circumstance, we need, to complete the record, two observers in the boats, who shall note down after the number of the shot (the observers must have recorders if as many as 3 or 4 guns are firing rapidly), previously written down on a piece of paper, his observation of the point of fall, and a man on board who notes the name of the man who fires each shot.

It is also important, during the practice firing of the marksmen with the great guns, to watch as closely as possible the behavior of the ammunition, since, from the deliberate character of this practice, this can be properly done by the addition of a few observers. During such practice with time fuzes—though there is no reason to use fuzes at all in marksmanship exercise—another observer, provided with a T, may note the position of the burst in range; another, stationed at the gun and provided with a watch, may note the time of burning of the fuze; and a third, also stationed close to the gun, may note, as accurately as may be, whether there is any delay in the action of the primer or cartridge. In the case of the use of percussion fuzes, the only additional observer for the fuze needed is one to note where the burst comes in range, thus ascertaining if there is any irregularity in the action of the fuzes. The method proposed requires, then, 6 observers when using time shell and 5 with percussion shell. It may be that the observers who note the points of impact might note also the point of bursting, when the firing is not rapid, thus reducing the number of observers to 4 and 3.

The part of the record thus obtained which is useful in training the men on board ship is that part which gives the points of fall of projectiles; the rest is useful and valuable to the officers of the ship, and to the persons who have in charge the preparation and issue of such stores, and copies of the record would, of course, be sent to

Digitized by Google

them. To facilitate work, the following plan may be adopted: Using a scale of 1 inch = 40 yards, which, with sheets 15 × 3 inches, representing the horizontal plane, will show all but exceptionally wild shots; draw on sheets of drawing paper lines inclined at angles of every 1°—to correspond with the T's—and from centres situated at 1000, 2000, and 3500 yards. Two such systems of lines being drawn, from points at the distances stated from the centre of the paper and on lines at right angles to each other, we have the means of quickly plotting the points of fall. These lines had best be drawn in ink, and the points of fall with the name of the firer always being put down in pencil, the sheets may be used a large number of times. From these records the points struck by each man may be taken off with tracing linen, and, after being exhibited to the man who fired them, may be retained for future reference by the officer in charge of such matters; for it seems likely that, if they are left with the man, or even with the officer of his division, they may be mislaid.

With regard to the distances of 1000, 2000, and 3500 yards, just laid down as those at which to draw systems of lines for plotting, it may be observed that whenever firing at ranges less than 1000 yards, the boats may be anchored at that distance, and similarly when the ship is firing at ranges between 1000 and 2000 yards. It does not seem advisable, with our present armament, to have firing at greater distances than 3500 yards.

This completes the matter of plotting practice when the gun and target are stationary: the points of fall are observed by two observers, and incidentally the behavior of the ammunition is noted, and this is all plotted in a manner which seems likely to save time and trouble. When, as must generally be the case in battery practice, the ship is in motion, a very slight modification will give the record. According to the maximum range at which it is wished to use the guns, two boats may be anchored with observers at distances of 1000, 2000, or 3500 yards, and on lines intersecting at right angles at the target; the ship is then free to move almost anywhere, and need only station a person to note the name of the firer of each shot in order to make the record complete. If it is desired to observe the behavior of the ammunition, there must be, in addition, one more observer in each of the boats to note the position of the shell burst, one to note the time of burning, and the junior officers of division must note the action of the primer and cartridge. The attempt to observe the behavior of the ammuniton at battery practice, however, is not likely, unless only a few guns are firing, to be successful.

Digitized by Google

In such practice there is one other point which must be attended to. It will be found impossible for the observers to catch all the shots fired by more than six guns, or even five, if they are well and rapidly served, and therefore the number firing should not be allowed to exceed this. The points of fall will, of course, be more spread out when the ship is moving; and after plotting on the sheets of drawing paper, sheets of tracing linen about fifteen inches square will be required to show all the shots. These sheets, it must be observed, are not a very good means of judging of the marksmanship of the men, unless the distance at which each shot is fired is carefully kept, as the errors arising from an imperfect knowledge of the distance are very considerable.

Finally, in order to give the means of conveniently comparing relative proficiency, describe about the centre of impact of the shots

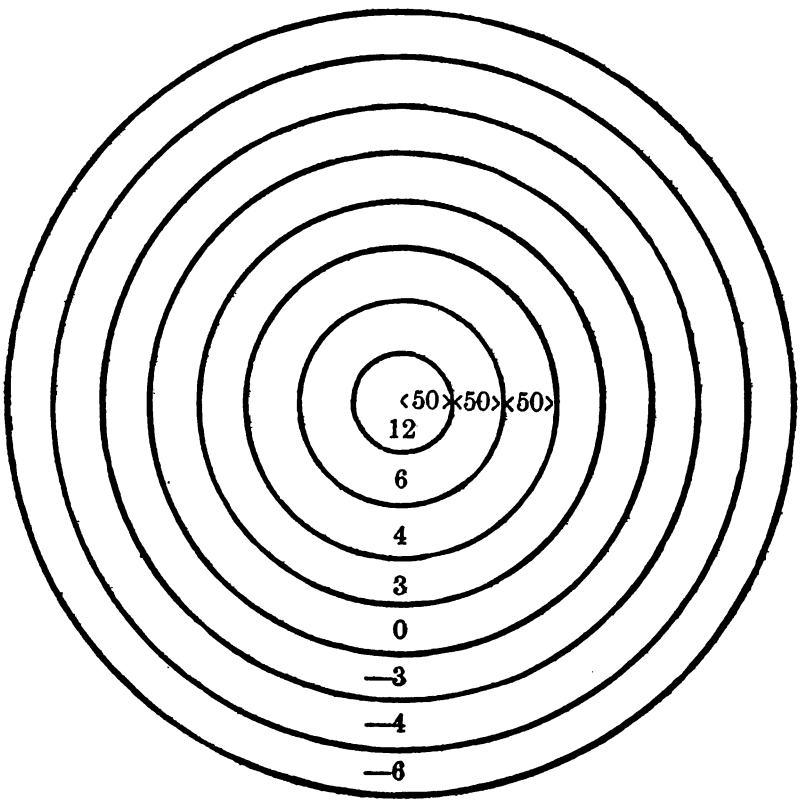

Digitized by Google

which they fire, circles of 50, 100, 150, etc., yards radius; make shots falling within these circles count 12, 6, 4, 3, 0, progressively outwards; those between 250 and 300 to count minus 3, those between 300 and 350 minus 4, and so on. All of this is shown in the diagram.

To adapt this method to battery practice, whether moving or stationary, describe the circles about the bull's-eye of the target. In the practice of individuals, the object is to teach them to shoot close; in that of the battery, to hit the object aimed at. With regard to the weight to be assigned to celerity in the service of the guns, whether at individual or at battery practice with service charges, the following plan may be adopted: Assuming that the 8-inch M. L. R. or the 80-pounder Parrott may be properly served from fire to fire in 2 m., the 9-inch S. B. in 1 m. 50 s., and the 60-pounder in 1 m.; let every gun which exceeds this rate of serving gain $\frac{1}{10}$ point for each second of such excess, and guns falling short of this rate lose $\frac{1}{10}$ point for each second of such defect. In calculating the gain or loss for celerity in battery fire—which, of course, would only be done if the battery was firing rapidly at will—use the mean rate of the battery as the starting point, and calculate the gain or loss of the whole battery as above. Thus the mean rate of serving the Tennessee's battery (8 9-inch S. B., 2 8-inch M. L. R., and 2 80-pounders) would be

$$\frac{110 \times 8 + 120 \times 4}{12} = 113.3 \text{ seconds.}$$

Thus this ship ought to deliver a shot in every 9.4 seconds. Finally, in stating the results of target practices, whether of marksmen or of the battery, state the *merit*, or the number of points gained divided by the number which it is possible to gain. Thus, for 30 shots, 130 out of a possible 360 were gained, or the merit is

$$\frac{130}{360} = 0.3611.$$

Thus the merit can exceed unity only by putting nearly all the shots fired into the smallest circle and gaining some points by celerity.

[It might be a good plan to cause gun's crews, when at their practice, to lose points for every violation of the drill as laid down in the manuals. This would lead to criticism of the drills, and thus naturally to their improvement. A gun's crew might, for example, lose two points for each violation of the drill by one of its members. The application of this to battery practice would lead to further complexity, and being also not of very clear advantage, is hardly to be recommended.]

Digitized by Google

The Training of Gun's Crews.—The gun's crews must, by careful oral instruction and by exercise, learn to handle their gun rapidly and certainly under every variety of circumstances. The guns should all be fitted with a rifle barrel, so that the crew can have plenty of exercise at getting the sights on in obedience to the orders of the gun-captain, and the latter plenty of practice at sighting under circumstances nearly the same as those when using service charges. These rifle barrels may be fitted outside with the M. L. guns, but, as a more rigid support may be obtained by placing them in the muzzle, this method may be better, it being necessary only not to put them so far into the gun that they cannot be loaded by thrusting the arm into the bore. After these barrels have been rigidly fixed, it is only necessary to fire a few shots with them, using the gun's sights, to have them in all respects ready for work. The gun-captain should be required to stand back at the end of the lock lanyard and to use the sights of the gun in all cases when firing. Wooden sights, the exact counterpart of the present gun sights, but with sliding head pieces provided, should also be fitted to each gun. It might be of advantage, from the difficulty of securing a rigid attachment of the rifle barrels to the great guns, to attach blocks of wood of the same profile as the gun's sights to the barrels, thus doing away with the necessity for absolute rigidity.

It is not proposed here to enter in detail upon the description of a system of aiming drill. Blunt's system, which has been in operation for some years in the army, is now issued to ships; and so much of it as is necessary, or possible of execution, may be carried out by ships. Supposing, then, that all of the men of a ship had been through a systematic course of target practice with shoulder rifles, of greater or less completeness according to circumstances; those men who had done well at this work, and who were otherwise fit to be captains of guns, might be put through the following course to fit them as marksmen at the great guns.

To facilitate the selection of these men by making the labor as light as possible, a shoulder rifle might be mounted at the ship's rail on a suitable carriage or block, so that when the man who is firing it stands back at the end of a lock lanyard of proper length, the circumstances would be much like those of the use of the great guns. A boat gun, mounted either at the ship's rail, or sent away in a boat to some suitable place, would answer the purpose in view better, perhaps, but, unless the supply of ammunition for boat guns were

Digitized by Google

larger than is usual, this method would hardly be advisable. To compete in this way—a manner as nearly like that of the use of the great guns as is possible—about twice as many men as are necessary to give two marksmen to each gun of the ship might be chosen, these men being, of course, taken from among those who had done well at the small-arm practice.

From all the men competing as described, those who excel would be taken to give two marksmen at every gun, and, of course, some proper incentive to exertion must be devised. The firing might, with advantage, take place in a seaway and when the ship is anchored, or in a boat under way and when rolling from 5 to 10°. Also the use of two targets, the guns to fire first at one and then at the other, is a good plan. The test should include one for quick sighting, and the system for assigning weight to this and to good shooting might be as follows:

Anchor at 100 yards from the ship a raft, showing to the ship a canvas screen 9 feet high and 3 feet long; this will very nearly represent a target 90 feet high and 30 feet long, placed at 1000 yards, and is therefore much higher than the targets usually attacked at sea; it is so proportioned in order to catch most of the shots, and thus give a better idea of the shooting than a smaller target would do. On this screen draw rectangles 3 x 1, 6 x 2 and 9 x 3 feet, and assign the numbers 9, 3, 1 to shots falling within these. Then give each man, on different days, say 3 to 5 trials, lasting three minutes each, and count the number of shots he fires and his score, and let his final score be the number of shots he fires plus 5 times the number of points he makes. Finally, throughout all the practice the firer must be told where to set the sight notch. The object is to pick out for the guns men who can shoot close, and use the sights over and over again in the same manner, and is not to teach men to judge distance.

By such means the marksmen for the great guns might be provided; in addition to these, it is very important to train a class of men who shall be able to use their shoulder rifles effectively at distances less than 1000 yards. The tactics of these men would be like those of skirmishers on shore; they would be taught to take cover, use a rest, and the officer commanding them must devise a system of drill which shall enable him to control his division to advantage, and to direct its fire to any point indicated by the captain. These men might be taken from those who do best at the general practice, and should have long range practice, with artificial rests,

Digitized by Google

either on shore or from the ship when still, at a mark erected on shore. In such circumstances, a marker could be put in a pit, and the points struck be signaled in the manner usual at rifle ranges. They should also have practice at shorter ranges than 500 yards, and with the ship in more rapid motion; but this, like all other target practice, must be carefully proportioned to the men's powers; they must be allowed to hit sometimes, or they will not try.

In order to keep the gun-marksmen in good trim, they should be required to fire frequently with a shoulder rifle attached to their guns in the manner described. Firing from 5 to 10 shots at the target already spoken of, at each weekly divisional exercise, might with advantage take the place of the present divisional exercises, the weekly general quarters being reserved for battery exercise. Besides this, in every quarter, one-third (say) of the allowance of service charges should be expended at individual practice; this would give 4 shots per quarter in the first year of the cruise, and 2 shots per quarter in each succeeding year to each gun. Evidently, from this small number, these shots had best be given to the two marksmen alternately in succeeding quarters. These shots should be most carefully used, and the behavior of the ammunition observed while firing them, in order to have a check on the sight bars. The methods already proposed for plotting target practice provide for this and for a scale of excellence attained. It may again be remarked that, during this individual practice with full charges, both in order to give the men good practice and to get a check on the sight bars, the distance of the target should be known beyond the possibility of a doubt.

Thus the method of selecting and training marksmen for the great guns which is proposed consists in (1) target practice for the whole ship's company with small arms; (2) the selection from among the men who do well at this general practice, of four times as many men as there are guns; (3) the selection from these, by causing them to fire in a manner nearly like that in which the sights of great guns are used, of two men for each gun in the ship, and (4) the substitution of great gun target practice at each weekly divisional drill, with rifle barrels attached to the gun, for the drills now usually held. As regards the instruction of the gun's crew in the preservation and use of their gun, the method proposed cannot fail to be effective.

The Training of the Battery.—After the training of individual marksmen, and the ascertainment, as far as possible, and removal of

Digitized by Google

their constant errors in the use of the sight points, the training of the battery must begin. It is not meant by this that no battery practice must take place until the individual practice is in every way completed, but only that the battery practice naturally follows the other, and that it may usually be improved by a constant study of the individual practice. The methods of scoring and plotting already elaborated are sufficient for every purpose, and it remains only to provide a means of working the battery as a whole.

In this practice the rifle barrels fixed to each gun will be very useful, and some preliminary practice should be had with them in order to insure the control of the fire to the officers of the ship. The practice should at first take place with gun and target stationary, and the ship may afterwards be moved in any direction in or near the triangle formed by the target and the two observers' boats, anchored in the manner already described. Another method, which is a very good one when ships are in squadron, consists in one of them towing a target by a long line while one of her consorts fires at it; this has the advantage of allowing a large number of persons to see the practice. The ships are very easily kept in any desired position in this case by means of compass courses and mast-head angles. The firing ship may steer any course on which her guns will bear, directly by the target; around it in a portion of a circle, may steer a tortuous course, or directly towards or away from the target. These being of varying difficulty, it is probably best that she should undertake the easier cases first.

It is necessary, of course, to make the fire of a ship accurate and rapid, to have properly trained men at the guns, and it is supposed that the gun-captains have been properly trained. If this is so—if they have learned to put all their shots on a small area, and if these areas have been caused to coincide by removing the constant errors of individuals—the commanding officer has in his hands a powerful agent from which, if he can get the sight notches into the right position for a little while, a good account may be expected.

The rules already given for the control of the battery of ship's guns are intended to be, so to speak, the connective tissue of the battery training. These attempt to supply simple, exact, and easily remembered rules to the officer who, from his station aloft and under the direction of the captain, controls the fire of all the guns of the ship; they form a condensed gunnery manual. These rules will require for their quick and certain application a good deal of drill of

Digitized by Google

the battery as a whole; and it appears that such drill, while using the rifle barrels attached to the guns at properly made and placed targets, might be made the weekly exercise at general quarters.

With regard to the rules laid down, it may be observed that the use of five-second fuzes, or a time fuze of any unalterable length, is very embarrassing. The only way to use these at ranges greater than that corresponding to their time of burning is to leave the patches on. The probable error of the guns of our service, that is, the error that is of such a magnitude that it is as likely as not that it will be exceeded, may, at 1000 yards range, be taken as 50 yards in range and 3 yards sideways.

The battery training, or the fire discipline of the ship, as it is sometimes called, should include the use of the sharpshooters who are provided with rifles, and whose training has already been referred to, and should indeed be made to simulate the circumstances of battle as nearly as possible. The effectiveness of the fire of these would begin at ranges between 1000 and 500 yards, according to the amount of sea on, and would unquestionably be very great at short ranges.

The Targets made in the North Atlantic Squadron.—The foregoing system furnishes a means of giving a number which shows at once the quality of the gunnery of a single gun's crew or of a ship. The method by which such a number is reached, though necessarily more or less dependent upon the arbitrary choice of the persons who draw it up, should be very carefully examined, because we must give the greatest weight to those shots which would really do most harm in battle. The statement of the single number as the merit is evidently substantially the same as that generally used in stating the results of firing with shoulder rifles at matches. In these latter, it is always said that each competitor made "so many out of a possible so many," or "such per cent of the possible." The *merit*, the number recommended to use in great gun practice, becomes "such per cent of the possible," if we multiply it by 100. The following table will be of interest as showing what merit should be made at individual practice—the practice of single gun's crews with a fixed distance. The range in the cases given was always 1000 yards, and was ascertained by mast-head angle—a very accurate method, as the limit of error in laying out a target by it should not exceed $\pm$ 5 yards. Though the accuracy of the method of laying out the target in individual practice will evidently not affect the merit reached, yet

Digitized by Google

it is very important as furnishing us with a check on the behavior of the ammunition.

RECORD OF THE MERIT REACHED BY THE EIGHT GUN-CAPTAINS OF THE RICHMOND UPON THE OCCASIONS INDICATED.

At Key West on May 9, 1887.		At Gardiner's Bay on June 20, 1887.		At Buzzard's Bay on August 29, 1887.	
Merit without Time.	Merit with Time Allowance.	Merit without Time.	Merit with Time Allowance.	Merit without Time.	Merit with Time Allowance.
.900	.653	1.000	1.367	.900	1.191
.717	.617	.900	1.333	.700	1.108
.733	.600	.900	1.085	.563	1.100
.700	.450	.467	.850	.800	1.025
.397	.400	.217	.133	.766	.916
.450	.298	.567	.050	.550	.908
.550	.197	.700	Lost.	.266	.633
.667	Lost.	.503	Lost.	.416	.441
Av'g..639	.459	.657	.803	.620	.915

The improvement, as shown by the averages of the merits with the time allowance inserted, is very marked, and the same has been apparent in the history of the practice of the other ships of the squadron. The average merit of 10 *battery* practices carried out by several ships in various circumstances in the last two years is + 0.247. The record of more battery practices than 10 is at hand, but the merit reached has been so low, from exceptional causes of rolling, that these are not given. It will be found that a battery practice, carried out at from 1200 to 800 yards, and mostly at the longer range mentioned, and when the ship is rolling full 5°, will rarely exceed .350. In the comparison between the battery and individual practice, it is apparent that the only causes for a less merit at the former are (1) the constantly changing distance, and therefore the probability of an erroneous estimate of this important datum, and (2) the roll of the ship. The roll of the ship, if not considerable—if it does not much exceed 5°—ought not to affect shooting much; and thus the large differences between the merit reached at individual and battery practice must be laid at the door of the officers—it is their business to make these two approach coincidence. It is the absence of (1) a correct knowledge of the distance, and (2) of good and efficient organization, and consequent coolness and quickness in handling the

Digitized by Google

guns at battery practice, which causes the merit at this to fall so much behind that of the individual practice—the practice by single gun's crews. The Galena, for example, reached a battery merit of .255 in Chesapeake Bay, and of .411 off Trinidad in the spring of 1887; while the average of the merits of her 5 gun-captains at individual practice at about the same time was .739. Another ship of the squadron made an average of +.639 at individual practice, and, two or three days later, at battery practice, made —.635. The cause of this was an incorrect application of an index correction to the sextant used in determining the distance; but the result was the same whatever the cause—the ship's firing was exceedingly bad.

Plotting Target Practice into a Vertical Plane.—The methods thus advanced of plotting target practice, and assigning a merit to gun's crews and ships, do not provide for transferring the shot points into a vertical plane; and, as the targets we attack at sea are nearly or always vertical, and as, for this reason, a vertical diagram conveys more meaning to the eye, it is necessary to state why this has not been done. In the case of the individual practice, because of the fixed position of the ship, it is easy enough to plot into the vertical plane; and vertical diagrams are always made of the shot points of each gun-captain, and furnished to the officer of his division, for exhibition to the men. But from the necessary inaccuracy of any process of plotting up, it is deemed fairer to find the merit from the horizontal diagram. As to the battery practice, it is obviously impossible, from the variable position of the ship, to plot into the vertical plane without very greatly increasing the elaborateness of the record; and, it must be observed, particularly at battery practice, a ship's officers should not be taken away from their stations at general quarters, to record the practice. The method used of plotting the individual firing into the vertical plane is the following: it is probably the best attainable in the absence of good distorted diagrams of the trajectory. From the equation to the trajectory in unresisted motion,

$$y = x \tan \alpha - \frac{g x^2}{2 V^2 \cos^2 \alpha},$$

we find, by putting $y = 0$,

$$\text{Range} = R = \frac{V^2}{g} . \sin 2\alpha .$$

Eliminating V between these two equations, we have

$$y = x \tan \alpha \left(1 - \frac{x}{R}\right),$$

Digitized by Google

an equation to the trajectory in which R and α are the constants, and a very convenient form for other purposes as well as the one now in view. This equation shows that, if we take the origin at the target end of the trajectory, we shall make a considerable error in multiplying the horizontal distance of the point of fall from the target (x) by the tangent of the angle of fall in any case where x in any measure approaches R in value, and that, in other cases, this is sufficiently accurate for purposes of practice. The labor of multiplying $x \tan \alpha$ by the factor $\left(1 - \frac{x}{R}\right)$, in all cases where x has any considerable magnitude, is not great, and it remains only to examine the accuracy

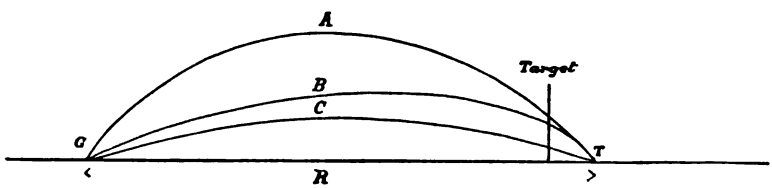

of the process. In the diagram, A, B, and C are three trajectories, all having the same range R, and A and B having the same angle of fall at T, while B and C have the same angle of departure at G. The trajectory B, which is intended to represent the form of the line in which a shot will move in air, is snubbed down at its target end, while A and C are each symmetrical with respect to their central ordinate. Now we want to find the place where a shot would have passed through a target in the position shown in the diagram, having given where it struck the water. If we substitute in the equation above, the angle of departure and the range described by the shot, we have the trajectory C; and if we use the same range and the angle of fall, we have A; and the figure shows that the first will throw the shot too low on the vertical target, and the second will throw it too low. But the ratio of the two values of y which we shall reach is that of the tangents of the angles of departure and of fall for the trajectory actually described—a ratio nearly of unity for the short values of R with which we shall commonly deal. On the whole, then, to use the equation, it is perhaps best to take the range which our plotting of the shot points in the horizontal plane will give us, and the angle of departure, since this avoids the labor of referring to the ballistic tables to find the angle of fall, and is sufficiently accurate.

Digitized by Google

Tactics and Drill.—We have already to some extent examined the matter of the instruction and drill of gun's crews, and of a battery of guns; for these two must be held apart. But as yet we have not trenched upon what lies back of the drill—what shapes the features of the drill. We are familiar with the terms naval tactics, infantry tactics, infantry drill, artillery tactics, sail and spar drill, gunnery drill, and so on. We never—at least we do not commonly—say gunnery tactics or gun tactics. We also use the terms sail tactics, or the tactics of sail, and sail drill. By the two former, which are synonymous, we mean the science of the movements of ships in battle, or when navigating, when their power of propulsion lies in their sails; while by the latter we mean the loosing, furling, and reefing the sails to make the crew of a ship skillful in these things. We say again naval tactics and steam drill, meaning by the latter term the practice of those evolutions of steamers which would occur in battle and in navigation. It is difficult, indeed, to discover any well settled distinction, in the use by English-speaking sea officers, of the two words drill and tactics. And yet we leave the thing which must be the guide in the formation of all our drills without a name; for the drill must have a rational basis, it must not be left to grow as accident prompts. In the phraseology used by the continental nations of Europe, the words tactics and drill, as applied to any weapon, have perfectly definite and well settled meanings; and meanings, too, which are useful and very important to keep apart. The word tactics means, with them, those principles of the science of war by which we discover what we want any particular weapon to accomplish; and the drill includes the machinery by which these ends are accomplished, and its use. Thus the handling by the officers and crew of any weapon on board ship we should call drill, even if the weapon is the ship herself—or the squadron or fleet; while the term tactics should mean the science by which we discover what our drills ought to enable us to do. We must fashion our drill upon existing tactics. The actual condition of tactics upon the sea indicates that, from a desire to use their torpedoes or rams, ships may often approach within 300 yards of each other, and that within this range the fire of magazine and machine guns will be very effective; thus a drill must be devised to bring a heavy fire of this description—while suitably sheltering our men—upon any point desired. A competent knowledge of gun tactics, then—of those rules governing ships in battle which are consequent upon the presence on board of them and

Digitized by Google

their enemies of guns—can only be acquired by those who have considerable acquaintance with the ram and torpedo. From the rules governing ships in battle because of the weapons they and their enemy carry, the drill must be drawn up.

Different Kinds of Fire of Guns.—Besides discovering for us what we must teach our men to do—how we must drill—tactics tells us what charges, velocities, angles of departure and of fall, projectiles, fuzes, etc., we should use. Most naval tacticians of the present day believe that ships, when fighting in the open sea, where there is plenty of room, will always be in rapid motion, principally in order to be ready at any time to avoid a ram blow from their adversary; and we may conclude from this that most of our shells should be fitted with percussion fuzes, because we cannot tell, when a gun is loaded, at what range it will be fired, and consequently what the time of flight will be. A study of the wars of the past, and of the present conditions of forts on shore, indicates that we may often, when attacking forts, be required to pitch our projectiles over some intervening obstacle upon a target beyond. To do this, we must resort, with ordinary guns, to what is called *curved fire;* the fire of ordinary long guns at angles of departure less than about 15°, and with reduced charges. Thus we see that we should be provided, in our firing tables, with the information necessary to strike targets at stated distances, with stated angles of fall. This class of fire might become necessary, again, when ships are required to protect a party endeavoring to effect a landing, by firing over them. It is usually stated that men will not be made unsteady by passing fire 30 feet above their heads (this estimate refers to light guns of about 3-5-inch calibre; in consequence of the greater noise made by them, larger projectiles should not be passed so near). We know also that the probable vertical error of guns afloat in smoothish water is about 4 yards; if then we try to pass our fire $30 + (3 \times 12) = 66$ feet above the heads of the men in the boats pulling in the line of fire, very few projectiles will pass within the limit laid down. It is evident that the variety in the ballistic problems which may thus be set the officers of a ship is endless. Another kind of fire from guns is called vertical fire; this is always carried on with specially constructed guns—usually mortars—and is defined as that included between angles of departure of 15° and 45°. Rifled mortars are now being made in many countries, and experiments with them afloat have given such

Digitized by Google

favorable results as to lead to serious proposals to mount them to some extent in ships. This is induced partly, no doubt, by the thick iron and steel armor which most battle-ships and many forts now carry. The increased power of the Defense has led to an attempt on the part of the Offense to seek out the weak spots. We have, then, with respect to the angles of departure and charges used, two classes of fire with ordinary guns, *direct* and *curved* fire; and have besides, with a shorter kind of gun, mounted on a special carriage, admitting of large angles of departure, *vertical* fire. In curved fire the problem presented is this: having given a certain range and angle of fall—the latter being fixed by the form and relative position of the obstacle we wish to clear and the target behind it—we have to find the muzzle velocity and angle of departure corresponding. This can be done by means of the ballistic tables; and then, with Sarrau's formula connecting muzzle velocity and charge—because we have the means of determining the constant which this contains from the firing table for direct fire—we can find the proper charge of powder to use. It will be best, of course, from the known imperfection of the method of thus arriving at the charge to be used, to fire some trial shots to test the accuracy of our results; but cases may arise in which it will be impossible to do this; and, at all events, the method suggested will give a good first approximation. Fire is classed under several heads according to the projectile used. We have, for example, fire of shot, of time shell, of percussion shell, of shrapnel, and of canister, and the inter-relation between the class of projectile used or supplied and tactics is very close. In the Franco-German war of 1870–1 the German field artillery were supplied with percussion fuzes in all their shells and shrapnels, while the French used time fuzes, capable of adjustment only for 1500 and 2800 metres in their shell, and time fuzes, capable of adjustment only for 4 different ranges, all between 400 and 1500 yards, in their shrapnel. Of course the supply of such material must have been caused by different views of the tactics of field artillery, and its effect upon the use of the artillery arm in battle—upon its tactics—must have been very great. The necessity for the formal separation of the fire of time shell from that of shot and percussion shell, as has been pointed out in what has been said about rules of fire, is urgent, and is a matter not fully recognized at present in our navy. The fire of guns is also classed as bow, beam, quarter, stern, and raking fire, according to how it is either received or delivered. The terms bow and stern fire are generally used as

Digitized by Google

meaning the part of the ship from which the fire is delivered, while raking fire usually means that received in either the bow or stern of a ship. A ship, while fighting, will usually desire to bring the enemy within that arc of the horizontal circle in which her own weight of fire is greatest; but she will also have a due regard to the efficiency of her own protection against hostile shot received in this arc. Thus with ships having heavy armored bulkheads across the bow, raking fire from ahead has no terrors. The fire of shot will evidently be directed against targets which they alone can penetrate, of shell against those thinner targets which will not break them up, of shrapnel against uncovered or very slightly covered bodies of men, and of canister against the same when at ranges not exceeding about 300 yards. The *control* of the fire of these projectiles, as the whole subject of the quick and sure adjustment of fire to any desired point is called, will evidently be of varying degree of difficulty; and, when advocating the use of any projectile, the attainable degree of perfection in its control in circumstances of service must be borne in mind. Shrapnel, for instance, would be very effective if their fuzes are accurate, the target fixed, and if they are well used; but whether shrapnel fire can be effectively controlled in the rapidly varying phases of naval combats in the open sea admits of doubt: These questions of the difficulty of controlling the fire of guns against rapidly moving targets have led to the proposal to use a fixed sight bar within permissible ranges. Clearly the dangerous space for a target of standard height should indicate in some degree what marks should be put on a sight bar (see example 12 of the applications of Chauvenet's Table of Probability).

The Tactics of the Gun.—The art and science of gunnery are so intimately bound up with the tactics of the gun—the rules governing the use of the gun in battle—that it is impossible to say which is the more important. Each is imperfect without the other, and is the complement of the other; as much as the science of invention is the complement of the actual state of the arts and manufacture. The ingenious inventor, with his mind well trained in physical laws and in the use of machinery of every kind, is able to devise means of accomplishing what is desired in the railroads, machine shops and manufactories; and so exactly, the accomplished and well versed gunnery officer is able to do whatever the tactician shows is necessary, and to devise means of overthrowing combinations invented by him in many

Digitized by Google

cases. With regard to the tactics of the gun in naval combats in the open sea—where complications regarding the depth of water, presence of forts or other defenses on shore, etc., do not enter—nothing more than an outline can be attempted here. If we examine the tactics of ships when sails were their means of propulsion, and when guns were their only weapon, we find that their tactics consisted usually in approaching each other to within about 500 yards or less, while being careful to avoid raking fire during the approach; and then the tactical phase being thus simply worked out, the battle of the guns was begun, and was fought to a finish. The guns which these ships carried were of comparatively low power, and thus the short range was necessary, both to enable them to penetrate and to make the dangerous space so great as to render the distance estimation unimportant, and their arc of horizontal train was small, being about 3 points in all, or 1½ points before and as much abaft the beam. Because of the smallness of the arc of horizontal train, it was easy to keep in the dead angles of the guns while approaching. The range for which the whole trajectory is dangerous space for targets of standard height has been called the *dangerous* range, and for guns of 50 years ago it did not exceed 500 yards or less. At present, however, the dangerous range for guns of high power, as against targets only 12 feet high—much less than the old targets—is from 1000 to 1100 yards; and these guns, instead of having total arcs of train of only 3 points, may always train through 8 points, often through 16, and, in some cases, through 32 points. Thus a modern gun whose arc of train is 32 points asks nothing of the tactics of the ship it is mounted in but that she shall be brought within 1000 yards of the enemy; it is indifferent to it whether the range is from a little less than 1000 yards—from 800 yards, say—to close contact with the enemy's ship. And thus we may lay down that, from 1000 to 300 or 400 yards, at which latter range the Whitehead torpedo begins to make itself felt, the gun is supreme; this is the *zone* of the gun. Then also, at some 700 to 500 yards, the fire of magazine and machine arms will begin to be felt, and, at shorter ranges, will begin to be much to be feared.

But the guns of the main battery of a ship would open, unless some question like a want of power to penetrate the enemy's armor or a low supply of ammunition forbade it, before the distance of 1000 yards was reached; and an *opening* range may therefore be laid down. This may be defined to be that at which the target would

Digitized by Google

catch ¼ of the shots fired, and, for present guns and targets, is about 2000 yards.

The tactical situation of two ships is perfectly defined by stating the length of the line joining them, and the angles contained between this line and the line of the keel of each ship—3 data. This angle, the one contained by the line of fire and the keel line of a ship, has been called the *presentment* angle, and its statement is very important as showing (1) how many guns will bear on the enemy, (2) what the angle of impact of the enemy's fire will be, and also, though the connection with gun tactics is indirect, (3) whether her torpedoes will bear on the enemy, and (4) within what distance she may allow the enemy to approach to make a ram attack while still retaining the power to turn and meet him bows on. We have thus the opening and dangerous ranges for guns of the main battery and for lighter weapons, and the presentment angle. Of these, the presentment angle is the one which offers the greatest difficulty to the tactician; for the types of ships are now so diverse, there are so few well recognized rules as to how guns shall be carried and how armor put on, that the complexity is very great. Some ships—most of the battleships—have two or more very heavy guns which they can fire right ahead, and these have also, usually, a heavy transverse armor bulkhead. Thus these ships do not fear raking fire from ahead; but other ships have their guns in greater number and power on the broadside; and the small shades of difference between these two extremes are almost infinite in number. The great difficulty in clearly laying down what the tactics of coming naval combats will be, or in knowing how to arm and armor ships, lies, however, in the opposite requirements of the gun and the ram; for the Whitehead torpedo, though a deadly weapon, is little more, tactically speaking, than a very heavy gun of short range. The ram wants the angle of presentment to be 0° and the distance 0; while the gun calls only—even in the case of broadside guns with 90° train—for an angle of presentment between 45° and 90°, and a distance between 1000 and 0 yards. Obviously, an accommodation can be reached; it will consist, perhaps, in the ship which chooses the gun as her weapon holding her enemy as far forward as the limit of train of her guns will permit; while her enemy, choosing the ram, holds bows on; then, when the proper range is reached, the ship which has chosen the gun will bring her bows on the enemy, if her guns have not turned him aside, and the battle will finish with the use of the ram.

Digitized by Google

With this short exposition of the tactics of the gun we must at present be content; the complete study of this, the most important study of the sea officer who elects gunnery as his special pursuit, must be reserved until after the acquirement of considerable knowledge of the use of all three sea weapons and of existing types of war ships.

Digitized by Google

Digitized by Google

CHAPTER XII.

FIELD FORTIFICATION.

A judicious use of fortification enables the weaker body of men (from whatever cause) to become equal to, or stronger than, a superior force; a knowledge of its principles assists in occupying a position to the best advantage, the artificial construction being so combined with the natural features of the ground as to produce from a minimum of labor a maximum of strength.

All works are made up of two parts, the profile, and the plan or outline.

Profile.—The profile is a section shown by a vertical plane at right angles to the direction of the work. The profile selected will depend upon the object the work has to fulfill, upon the projectiles it may have to withstand, and upon the nature of the surrounding ground.

A trench is an excavation in rear of the covering mass, a ditch is one in front of it.

Cover is more rapidly gained by the use of trench, as it will be obtained by the excavation plus the height of earth thrown immediately in front. The profile may be of the simplest form, requiring twenty minutes for completion (dimensions being, depth 1 foot 3 inches; width, 2 feet; height of parapet, 1 foot 3 inches, for the purpose of covering one rank kneeling in the trench, and a second rank lying close in rear of it), or it may even be similar to that of trenches used at sieges (10 feet wide at bottom, 3 feet deep in front, 3 feet 6 inches deep in rear, and having a reverse slope at 45°, a front step 1 foot 6 inches high and 1 foot 6 inches wide, and a space left to stand upon, 1 foot 6 inches wide at the foot of the parapet, which is 4 feet 6 inches high, thus making the whole amount of cover 7 feet 6 inches). The profile would be of a nature varying between these two examples. Trenches enable the defenders to assume the offensive at a fitting moment (for instance, supposing the attack to be thrown into confusion, owing to their near approach to the rapid and close fire of the work, assisted by the judicious use of obstacles so situated as to detain them under that fire), the men being able to charge over the parapet.

Digitized by Google

A ditch might provide the earth for the parapet in works of a more important nature, and at points which are purely defensive. The bottom of a ditch may be formed in a V shape with advantage, in order to prevent the attack from accumulating there.

The profile may be formed also of a trench and a ditch, the men working on each side of the parapet and throwing the earth upon the intermediate space. By these means a considerable thickness of parapet may be obtained in a short time, but in such a case the ditch does not become deep enough for a sufficient obstacle, but may be subsequently deepened, the earth being thrown upon the crest of the counterscarp and forming a sloping surface called a glacis.

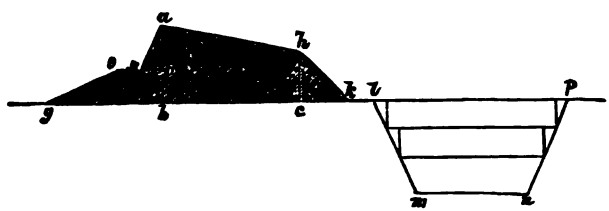

The above profile is that of a parapet and ditch. The dimensions are obtained by the following considerations: The command, *ab*, by the amount of cover required to screen the interior of the work and the position of the enemy; the thickness, *bc*, by the nature of the projectiles likely to be used against it, for field artillery, 12 feet to 15 feet, and for rifles, 4 feet (these dimensions may be lessened, except for rifles, for the rear faces of works); *ef*, the banquette, is to enable riflemen to fire over the parapet, and is made 3 feet wide for a single rank of men, and four feet 6 inches for a double rank; *eg*, the slope leading to the banquette, has a base equal to double its height; *af*, the interior slope, is revetted (it being so steep as to require artificial support); *ah*, the superior slope, is sufficiently sloped to enable the defenders to see the top of the counterscarp, and, upon level ground, is as 1 : 6; *hk*, the exterior slope, is at an angle of 45°; *kl*, the berm, is made sufficiently wide to relieve the escarp from the pressure of the parapet; *lm*, the escarp, usually slopes about 2 : 1 if the soil be strong, and as much as 45° in sandy soil; *pn*, the counterscarp, is made as steep as the earth will allow, as it has no weight to bear like the scarp. The ditch is from 6 feet to 12 feet deep, and should be at least 12 feet wide at the top. The slopes of the ditch are obtained by excavating it in steps, as shown in the sketch; the

Digitized by Google

depth and base of the steps being in proper proportions; these steps are subsequently cut away.

Outline.—The outline is the general arrangement, or trace, of works upon the ground. As much direct and flanking fire as possible must be brought to bear upon points of attack. In very uneven ground, where direct fire cannot be given, there will be always found some points from which flanking fire may be obtained. The three points to be considered are: 1st, the object of the work, that fire may be given in the required direction; 2d, that its own ditches shall not be dead, that is, unseen by the fire of the defenders, and that the ground over which the attack must be made shall be under fire of the work; 3d, that those defending the works shall be protected from oblique, enfilade or raking, and reverse fire.

The outline, therefore, will depend upon the object of the work and the natural features of the ground.

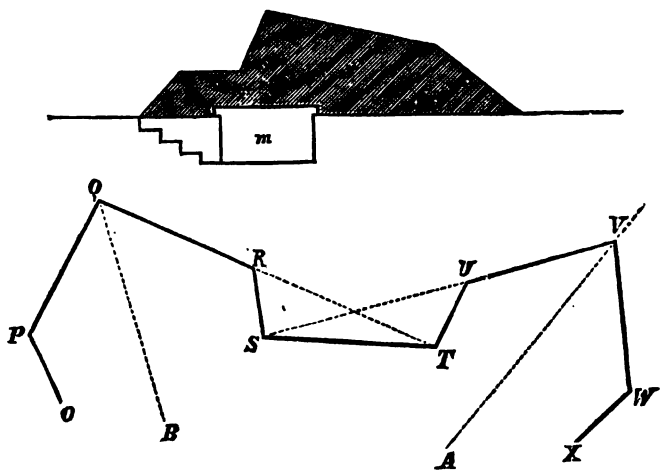

PQR and UVW, Advanced Parts.
RSTU, Retired Parts.
PQ, QR, UV, VW, Faces.
RS, TU, Flanks.
ST, Curtain.

QT, SV, Lines of Defense.
PQR, UVW, Salient Angles.
RST, STU, Re-entering Angles.
VA, QB, Capitals.

The following definitions and simple rules will be found useful:

The extent of the work will be determined by the number of men required for its defense. Two men per lineal yard of the parapet, with half that number in addition as a reserve, was formerly con-

Digitized by Google

sidered an ample garrison in most cases, but in the present day, taking into consideration the greater use of curved fire of shells, the precision of rifled artillery, and the rapidity of fire with breech-loading small arms, it would be inexpedient to crowd men together. One man per running yard, and half that number in addition as a reserve, will probably be sufficient for most positions. Field guns will occupy each a length of 15 feet upon the faces of works, and 40 feet (20 feet on each side) at the salient angles.

Splinter-proof traverses, 4 feet wide at top and 6 feet wide at bottom, may be placed between field guns, and to give protection from enfilade or oblique fire. Those of similar construction, to give cover from reverse fire, are called parados traverses; within such traverses magazines may be conveniently formed. When the interior space is limited in a field work, the magazine may be placed under the parapet, as shown in this section.

A salient angle is formed by two faces projecting outwards, towards the enemy. Such angles, being points of attack, should be as few and as prominent as possible, so that the points of attack may not be doubtful, and may be well prepared for defense. They should be as obtuse as possible, and not less than 60 degrees, in order that a greater extent of ground may be seen from the parapet, and should be situated upon the higher points of ground, in order that the interior of the work may be the better screened.

A line of defense is the face of a work, which, together with its ditch, receives flank defense. In detached works which mutually flank each other, it consists of the portion which is flanked, together with its distance from the flanking work. For the close flanking of ditches, lines of defense should never be greater than 300 yards. The distance between detached works, in order that the ground in front of them may be defended by the artillery fire of the collateral works, may extend to 1500 or 2000 yards. Faces of works will usually average from 40 to 60 yards, and should be directed clear of a raking fire from the front; this will usually be the case when the salients are obtuse; the prolongations of all faces of works should, if possible, be directed upon points where it is impossible to establish batteriès, such as marshes, etc.

An angle of defense is the angle contained by the flanking portion and the line of defense. The limits are from 90 degrees to 120 degrees; about 100 degrees is best.

The capital of an angle is the imaginary line bisecting it, along

Digitized by Google

which the enemy advances. That portion of the capital under fire should be made difficult by the use of obstacles.

As a corollary to the rule that salient angles should occupy the higher points of ground, re-entering angles will necessarily occupy the lower points. The openings or communications through works, which may be necessary, are formed near the re-entering angles.

Flanks should never be less than 12 yards long, otherwise the ditch will not be seen, much of this space being occupied by the slopes of the portion which is flanked. When it is advisable to flank with artillery, not less than three guns should be used.

Construction of Single Field Works.—Pickets are to be driven at the salient and re-entering angles, and tape or string passed round them. The lines traced are the crest line (or highest part of the work) and the lines marking the excavation for trenches or ditches. With ditches these lines will be the crest of the work and the edge of the escarp and counterscarp; if with trenches, it will be sufficient to mark the front line of the trench only. "Profiles" or skeletons of the work are then set up, formed of slips of deal or other wood, secured to pickets driven into the ground; or they may be formed with wood, cut to the proper lengths, for the heights of the various slopes, connected at their ends with rope yarn.

Right Profile.

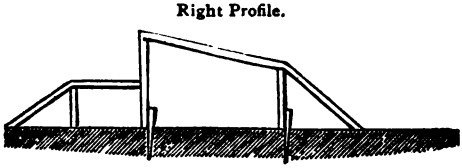

The berm is generally left roughly, and dressed upon the completion of the work.

Oblique Profile.

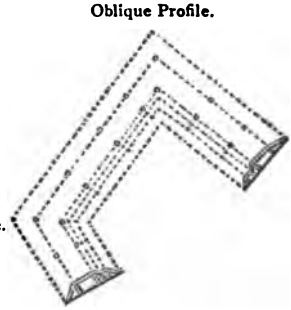

Oblique Profile.

Digitized by Google

Upon long faces at least three profiles should be set up. At the angles of the work oblique profiles are erected, whose dimensions will, of course, vary with the sides of the angles.

It is advisable to divide the working party into squads of 25 men, each squad having a responsible overlooker. With trenches it is best to place the men at intervals of 6 feet along the tracing line, each man having a pick and shovel. When all is ready the work is commenced simultaneously, each digger beginning at the *left* of his task, and getting cover to the required depth as quickly as possible, and then extending the excavation to his right.

With ditches, place the diggers along the escarp line, facing the work, each with a pick and shovel, at intervals of 6 feet. *Shovellers* are placed upon the ground to be occupied by the parapet, in the proportion of two to each set of three diggers (the whole number being, therefore, one-third less than that of the diggers); these have shovels only. *Rammers* are placed in the proportion of one to each pair of shovellers, in order to consolidate the earth; they should not allow more than 6 inches in depth to accumulate without ramming it well. Suitable instruments for their use are of very easy construction. The ramming is not done with a view of resisting projectiles, as loose earth will do this better, but with the object of solidifying the work.

By the above arrangement every 6 lineal yards of parapet will require 3 diggers, 2 shovellers, and 1 rammer, making in all a working party of 1 man per running yard of parapet. Little is gained by a second row of diggers in the ditch, which, manifestly, would not leave space beyond the first relief. In difficult soil, however, a second row is sometimes made use of. In this case the additional diggers work near the counterscarp, throwing the earth upon a space left 7 feet wide between the rows, from which it is afterwards removed. Such a disposition is not possible in ditches less than 17 feet wide at top.

The working party may be divided into 3 or 4 reliefs of 8 hours, the work being carried on continuously. It may be better to employ task work, giving each man 4 or 6 hours, supposing that 2 cubic yards per hour can be excavated in easy soil (the use of the pick not being required) and 1 cubic yard per hour when the ground is more difficult; but the men should be tasked *by squad*, and not individually, otherwise the work will be spasmodic and difficult to supervise. The overlookers in charge of the squads should be relieved at intermediate periods to the workmen, otherwise there will be confusion and hindrance to the regular progress of the work.

Digitized by Google

The upper layer of soil should be thrown inwards beyond the profiles, being of a better nature to complete the slopes of the parapet. All stones should be avoided or placed aside, as they would cause splinters. If necessary, parapets may be drained into the ditch, or trenches into cesspools; grooves cut into the ground and filled with large loose stones, or covered with brushwood, will effect this.

When the position to be defended is on the same level as the enemy, a parapet 8 feet high gives sufficient cover; but when the enemy is in possession of an eminence within range, the necessary height of parapet is thus obtained: place a post 3½ feet high in the gorge of work; also a vertical pole, where the parapet is to be, in line with both enemy's position and the post in gorge; obtain a line of sight from top of post to enemy's position, and note the point in the pole cut by this line, and raise the parapet 4½ feet above this point.

Earth newly dug up will not stand at the steep slopes required for some portions of the work; the means used to effect this are called revetments; hurdles, 6 feet long and 2 feet 9 inches high, may be readily formed; 10 pickets will be a good number. A gabion is a cylindrical hurdle, filled with earth when placed in revetment; gabions are 2 feet in diameter and about 3 feet high; fascines or bundles of brushwood from 7 to 9 inches in diameter, and of various lengths, are very good for this purpose; they are bound together by tough twigs, at intervals of about 18 inches; this revetment is built as the parapet is raised, and secured to it by means of pickets driven into it at angles of 45°, each row of fascines being also picketed to the row beneath; the joints of the rows of fascines should be broken; it is necessary to use revetments for the interior slopes and cheeks of embrasures; if fascines cannot be procured, planks, casks or sand bags may be used for this purpose. Magazines are frequently constructed on the unexposed sides of traverses, as follows: Place strong splinter-proof timbers at an angle of 45° against a well revetted traverse, strengthened by bags of earth and sods, the whole covered with tarpaulins.

In embrasures the cheeks slope outwards to give the guns more training; the inner part, called the *neck*, is 2 feet wide (the width of a gabion), and the outward splay is obtained by making the sole 3 feet wide at a distance of five feet from the neck; the sole of the embrasure should have the proper inclination, to allow the guns to be fired at the required degree of depression; embrasures should, if possible,

Digitized by Google

be cut direct through the parapet, as when cut obliquely the parapet is weakened.

Platforms.—For an ordinary field gun the platform consists of merely sufficient plank to take the wheels and trail, inclined 6 inches from rear to front, in order to lessen recoil and facilitate running out.

For heavier guns, 5 sleepers, 15 feet in length and 5 inches square, are required; they are placed at right angles to parapet, the outer ones being 10½ feet apart. 20 planks 10½ feet long, 9 inches wide and 2 inches thick are nailed with long spiked nails across the sleepers; 2 riband pieces, 15 feet long and 4 inches square, are nailed to the outer upper edges of platform; a piece of timber, its length being the width of platform, and about 4 inches square, is secured across the outer end of platform, to prevent the gun wheels from damaging the parapet.

Gun platforms are usually laid at a slope of 1 inch in 15 inches.

A glacis is a bank of earth raised on the counterscarp, with its upper surface gradually sloped away to nothing; it is used when the parapet is too high to allow the fire from the superior slope to reach the edge of counterscarp; it also protects the parapet from shot.

To hinder the approach of the enemy, keep him under the fire of the intrenchments, and render an assault as difficult as possible, are most important points in the defense of field works; to effect this the use of various obstacles has been adopted, and it must especially be borne in mind that obstructions should always be placed in the unflanked ditches. Palisades made of young trees, or of large ones split into two or three pieces of a triangular shape and pointed, 10 feet long and 6 or 8 inches thick, are very useful when placed either upright in the middle of the ditch, or at the foot of the escarp inclining outwards; they are planted 4 or 5 inches apart and buried 3 or 4 feet in the ground. The lower ends under ground are connected by a riband or cross piece (to prevent them from being torn up separately); another riband is also used to connect them at about 1 foot from the top.

Abattis are constructed of trees or stout branches having their ends pointed and fastened to the ground with strong pickets, the branches being turned towards the enemy; for putting a village into a state of defense, trees bordering the road can easily be turned into a serious obstacle by sawing half through their trunks and fixing their heads to the ground.

Digitized by Google

Trous de Loup are also very useful placed in front of the counter-scarp, especially at the salient angles; they are pits of either 3 feet in width and depth, or of double these dimensions; a sharpened palisade is placed in the centre, the point is not to project above the mouth of the pit; on no account should the pits be made 4 or 5 feet deep, as the enemy might then turn them into rifle pits.

To occupy a village as a military post, the following general rules should be observed:

First select some suitable and substantial building as a stronghold, and determine whether it would be best to occupy the whole village, or a part only. Avoid wooden houses and thatched roofs, and prefer brick houses to those of stone, selecting such as mutually flank each other. Take care that the amount of ground occupied be not in excess of the number of men available for the defense. Salient points must be strengthened as much as possible; all houses not occupied by the defense which may be of the least use to the attack must be demolished. *Outside* the defenses destroy all walls, thick hedges, and any cover which may be parallel generally to the place, and leave such as may be perpendicular to it, and which will therefore be enfiladed and cause obstruction. *Inside* the place, reverse this rule; *wet* ditches, palings, and thin hedges outside the place may be all left. Hedges, walls, etc., may be incorporated with the general line of defense. Long walls may receive flank defense by means of *tambours* or projecting small angular works of stockade work; communications may also be thus covered. The streets may be barricaded and the houses loopholed; great care must be given to the communications with the stronghold, and also that barricades be not in positions to be taken in reverse; in this case other barricades must be formed in rear. Field guns must be placed in commanding and retired positions difficult of access.

A sufficient garrison for a building will be at the rate of 1 man for every running 4 feet of the lower story, 1 man for every 6 feet of the second story, and 1 man for every 8 feet of the upper story, should there be one. All windows and doors of the lower stories should be well barricaded and secured, and ditches cut around the house. Doors may be barricaded by heavy furniture filled with earth or filled sand-bags; doors should, if possible, be made bullet-proof by nailing upon them additional planking. The glass in all windows should be at once demolished, and the window frames filled up with rolled blankets, carpets, etc. If there be no time to destroy all the glass,

Digitized by Google

blankets secured by forks within the window frames will prevent splinters. Loopholes should be made in the walls and at the angles. The upper windows need not be barricaded throughout, but must be so to a height of 6 feet from the flooring. Balconies may be strengthened and made bullet-proof, being loopholed at the base in order to give fire from beneath to the foot of the wall; suitable overhanging constructions of a similar nature may be formed by beams of timber, these being passed through the wall and secured inside to the joists of the flooring; it would be advisable to construct them over outer doors. Especial care must be given to the communications inside the building, staircases being partially removed and ladders substituted. If the outer wall be liable to be weakened by artillery fire, the flooring inside should be supported in addition by stanchions. *Plenty* of water must be available, in casks, etc., within the building.

Loopholes should be made as small as possible, the width at the neck never being more than 3 inches.

Walls.—A wall 4 feet high will give cover, but this may be improved by placing stones or sand-bags at the top, leaving spaces to fire through. Such walls may be used with great advantage, beams of wood being placed upon the top, or stems of trees, in which indentations may be sawn underneath to fire through, as in the sketch.

A ditch should be made in front, if time will allow. If the wall be 6 feet or 7 feet high, a banquette may be made from a trench in rear, a ditch also being dug. On walls 10 feet high, loopholes 6 feet above the ground may be formed (a banquette being constructed), or fissures may be cut from the top of the wall, the upper part of them being filled with stones or sand-bags. With very high walls two tiers of fire may be formed by piercing loopholes upon the ground level, and firing from a trench 3 feet or 4 feet deep and 2 feet from the wall, in addition to the upper loopholes, the banquette for the latter being formed by planking resting upon casks or upon joists piercing the wall. If the wall be extremely high, the lower tier of loopholes may be the usual height, in which case a ditch may be formed in front.

Digitized by Google

Hedges of more than 6 feet high may have a ditch excavated 2 feet in their front, about 3 feet deep, 8 feet wide at bottom, and 10 feet at top. The branches cut above the height of 6 feet may serve to strengthen weak parts. Place the men about 4 feet apart, and the time for execution will be about 4 hours, the earth being thrown over the hedge, forming a parapet and banquette against it on the other side, and rammed. If more haste is required, the earth may be thrown against it from a trench at 12 feet distance inside it, of the same dimensions as the ditch already given.

If on a steep incline, a trench should always be used. In half an hour a trench 2 feet deep and 3 feet wide will provide sufficient cover; in this case the branches are all left. Ditches on either side of the hedge already existing may be made use of by improving them, either to form an obstacle, or trench for cover for the defense.

The following brief description of the *trace* of simple field works may supplement the previous remarks upon the *outline*.

Field work may be classed under the heads following:

1. Open works.
2. Enclosed works.
3. Continued lines.
4. Lines with intervals.

The simplest line that can be used, where the front to be defended is of limited extent, and the flanks and rear are secure, is a *right line*. But from this line only a direct fire can be obtained; and for extended forms a combination of front and flank fire may be obtained by using the *indented line*.

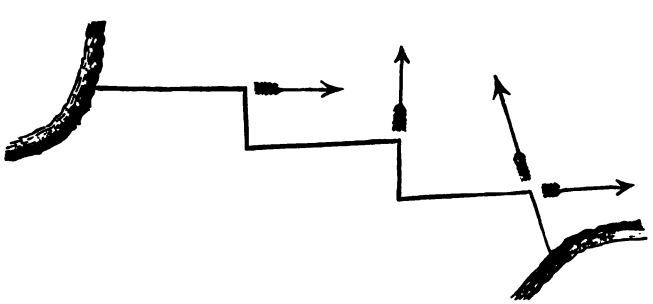

Indented Line.

Digitized by Google

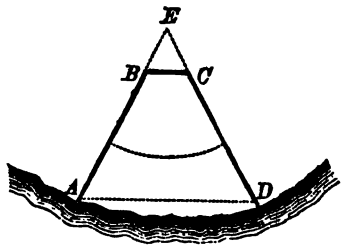

PLAN OF THE REDAN.
AB, CD, Faces. AD. Gorge.
BC, Pan-coupée.

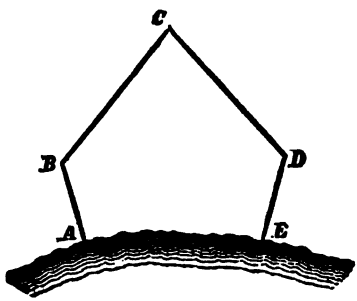

PLAN OF THE LUNETTE.
BC, CD, Faces. AB, DE, Flanks.

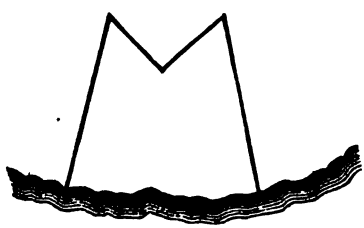

THE TENAILLE.

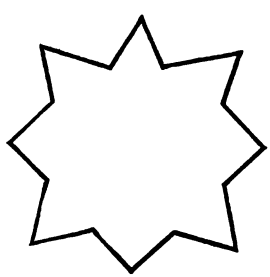

PLAN OF A STAR FORT.

Redans, *lunettes*, and *tenailles*, and all works open at the gorge (or rear portion) are called *open works*, not having a continuous earthen parapet.

A **redan** consists of two faces forming a salient angle towards the enemy, and is the simplest form of field work. To these faces may be added flanks.

A **lunette** is composed of two faces forming a salient, and two flanks in a direction generally parallel to the capital. These flanks are not flanks in the usual acceptation of the term—that is, with respect to the faces—but flank other collateral works, or ground, which the faces, owing to their oblique direction, cannot see. Redans and lunettes are suitable to defend bridges, avenues, or dams; the gorge may be defended by palisades, stockades, or obstacles, but the work will still be an "open work."

A **tenaille** is formed by two faces forming a re-entering angle.

The lengths of the faces would be usually about 40 or 50 yards, and those of the flanks from 12 to 20 yards.

Enclosed works are formed by a continuous parapet of earth, enclosing a space.

Redoubts, Star Forts, and Bastion Forts are enclosed works.

Star Forts have salient and re-entering angles alternately; these are defective works, presenting

Digitized by Google

many points of attack, are subject to a raking and reverse fire from all directions, and have large unseen spaces in their ditches.

Redoubts are of very frequent use: they may be square, or of any regular, or irregular, polygonal form. From the nature of their outline the ditches will necessarily be unseen from the parapet; this defect may be modified by auxiliary methods. Palisades driven *across* the ditch at intervals, that is, transversely, will hinder the men composing the attack from spreading along the ditch, and confine them into crowded small spaces into which grenades may be thrown, or shell rolled, with beneficial effect from the parapet above. Crows' feet, or wire entanglements, may be advantageously used in conjunction with the palisades. In suitable positions the ditch may be a wet one.

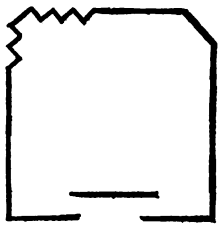

PLAN OF A REDOUBT.

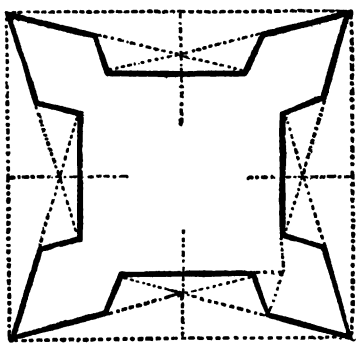

PLAN OF A BASTIONED FORT CONSTRUCTED ON A SQUARE.

Reverse galleries, of the nature of small wooden huts buried within the counterscarp and loop-holed towards the ditch, may be used where not exposed to the curved fire of field artillery. A better defense will be by means of *kaponiers* (or caponnières) extending into the ditch as low as possible; these are small wooden bullet-proof constructions, roofed over with splinter-proof timbers covered with earth, and having a communication under the parapet with the interior of the work. A kaponier, 4 feet high inside and 2 feet wide at the bottom, having a small berm 1 foot wide to sit upon whilst firing through the loopholes, the whole being about 12 feet in length, may be very readily formed. The loopholes may be 18 inches apart. Machine guns will no doubt be used in kaponiers constructed to receive them.

Continued Lines may be a combination of most of the tracings above described, but are now only used for positions of no very great

Digitized by Google

extent, so that the reserves may act at once upon the point selected for attack; they may be used with advantage to connect important works, care being taken to preserve them from a raking fire across tongues of land, etc.

Lines with Intervals consist of works either open or enclosed, placed so as mutually to flank each other. A comparatively small number of men may thus occupy a large extent of ground. Torpedoes may be used upon the intervals between the works. To destroy an earthen parapet the fire should be concentrated as much as possible, commencing at the top of the parapet and cutting downwards (just the reverse for breaching an escarp wall); one large gun is to be preferred to several of a smaller nature, shells having a large capacity for powder being the most effective. Those planted low in the work merely throw up the earth to fall again upon the breech already opened.

Digitized by Google

CHAPTER XIII.

DUTIES OF JUNIOR OFFICERS OF DIVISIONS.

When cadets graduate from the Naval Academy and are assigned as junior officers of divisions in sea-going ships, their usefulness will depend upon their intelligence and attention to duty. The instruction given them before such assignment cannot be more than preparatory, and they should remember that, from their want of ready knowledge, they have still to acquire much before they can clearly establish their worth.

They frequently err in being slow in obeying orders and in a general want of attention and promptness. They also want in ability to properly direct and manage a number of men placed under their orders. This last cannot be urged to their discredit, since they have had no opportunity of acquiring this all-important art. They will, however, be continually called upon to exercise it, and will be blamed if they do not acquit themselves well. It is the aim of this chapter to furnish such information as will familiarize cadets with their duties aboard ship as much as possible.

After reporting for duty on board ship the naval cadet should at once prepare himself for his duties as a junior officer of a division by acquiring a knowledge of the position of the guns, magazine, ammunition and torpedo rooms, the flood and waste cocks, the powder scuttles and hatches for hoisting projectiles, the pumps and fire apparatus, and the armory. He should also make for his use copies of the quarter bill, the fire bill, the station bill for clearing ship for action, the stations for armed and equipped boats, company lists and details for landing the ship's crew as an armed force, and the cleaning bill for the division for which he has been detailed. If stationed at a gun division he should make sure of his knowledge of the charges of powder and means on board for firing, of the projectiles and the ranges at which they can be used and their fuzes. He should also observe the lead of electric wires, and make himself conversant with position of all apparatus connected with the battery or torpedoes. If detailed for the powder division he should acquire a knowledge of the storage of the magazines and shell room, so that he may be able

Digitized by Google

to designate the position of any class of ammunition. His station when boarders or riflemen are called away, as prescribed by the Ordnance Instructions, should demand his attention.

The duty of a junior officer at morning quarters is to assist, as may be required, in forming the division for the inspection of the officer commanding it, following the routine laid down in the Ordnance Instructions, and accompany his senior throughout the inspection. As this includes an inspection of the cleanliness and care of the bright work and machinery of the gun carriages, and of the implements used in the service of the guns, the duty of the junior officer is to be present at the division to personally superintend the cleaning of bright work during the period allowed in the ship's routine. He should require each man in the division to be present and to perform the duties of his number on the cleaning bill. If a man is necessarily absent, another number should be detailed to perform his duties. He should be careful to see the pivot sockets clean and the tracks cleared and swept. While at quarters, and during the temporary absence of his senior, he should take command, and see that order and quietness are observed. At exercise he must be diligent in carrying out the orders of his superiors, being careful to see that all details are observed and precautions taken, as required by the Ordnance Instructions, and that the men work quickly and quietly. If detailed as aid to the Commanding Officer, he should prepare a note-book for use at exercise or in action, to take notes of times or events, as may be required. At evening quarters the division is simply mustered and reported. Besides the daily inspection of the division, other inspections are made at the times appointed by the Executive Officer. These inspections of clothing, hammocks, and bedding are made by the Commanding Officer of the division. Lists are taken and retained of the quantity of clothing in the possession of each man, who is held accountable for the care of the same from time to time. The clothing should conform to the regulations as to quantity, material and make, while the watch and rank marks should be properly placed. All new articles acquired by requisitions must be added to the clothing list. The requisitions for new clothing and material are prepared by the junior officer of the division, for the signature of the officer commanding the division. He should also be present at the issue of new clothing, in case of complaint, to refer the same to the officer commanding the division. At the inspection of scrubbed hammocks, made at quarters, the officers of the division see that the hammocks are clean and placed in their proper bags.

Digitized by Google

When assistant to the Ordnance Officer, the cadet should be familiar with the returns required to be made at regular intervals, and of the books kept on board. When a vessel is placed in commission the articles put on board are named in the invoice. This is copied into the Ledger, which contains, in proper columns made up to the end of each quarter, the receipts and expenditures during that period. The regulations concerning the care of this and the Minute Book will be found in the Ordnance Instructions. From the Ledger is made the Quarterly Return of Receipts and Expenditures, which is forwarded to the Bureau of Ordnance at the expiration of the quarter.

The Quarterly Report of Target Practice with Great Guns consists of a detailed report of the practice, together with a diagram showing the point of impact of each shot on a vertical plane passing through the target.

The diagram found upon the report of target practice (Form No. 5 S) will be used, the horizontal line running through it being considered as the vessel's water line, and upon the middle of this will be drawn a fair figure of the ship (broadside on), upon the same scale as the diagram, the centre of her length being placed where the target is now found. As a general rule, the horizontal coordinate of each round fired will be observed by estimation, or by any other means that may offer. The vertical coordinate must be obtained in each case by applying to the distorted trajectory of the gun the estimated range to the point of fall, and the known distance of the target. The position of each shot in the vertical plane, above or below the water line, can be projected on the diagram, its horizontal position being taken from the record (to the right or left of the target, as the case may be). Shot that strike short of the target will be entered below the water line, at the point where they would have pierced the vertical plane, supposing that the water had not deflected them. Each vessel will be supplied with a number of drawings of the distorted trajectories of the guns. The method of obtaining the vertical coordinate of any shot is as follows:

From the origin as a centre, with a radius (taken from the horizontal scale) equal to the known distance of the target, scribe on the distorted trajectory a mark or dot which will denote the position of the target; draw through this dot a perpendicular to an imaginary line connecting the dot and origin. From the origin with a radius equal to the estimated distance of the point of fall of any shot, scribe

Digitized by Google

on the trajectory a mark which will represent the point where the shot grazed the water; a line containing this point and the origin will then be drawn to intersect the perpendicular previously drawn through the target. The distance between the target and the point of intersection last found, read off by the vertical scale, will be the vertical coordinate required, which must be transferred to the diagram on the back of the report. The point of impact will be projected above or below the water line according as the shot was over or short of the target. Of these lines, only the perpendicular passing through the target need be drawn on the paper.

The Quarterly Consolidated Report of Target Practice with Small Arms is made from the detailed reports of the divisional officers. The divisional reports, besides showing the record of each man, give a diagram of the target with the striking shots noted.

Quarterly Report of Target Practice with Machine Arms.

Quarterly Report of Endurance of Great Guns (number of fires).

Quarterly Report of Condition of Armament and Ammunition Rooms (a written statement).

Quarterly Report on Machine Arms and B. L. Small Arms.

Quarterly Report on Torpedoes and Electric Connections.

At the expiration of the cruise the Ledger is posted, and a Quarterly Return of Receipts and Expenditures made up. All articles are surveyed and the survey approved before ship goes out of commission. A Final Report of Description of the Battery is required.

Digitized by Google

Digitized by Google

Digitized by Google

Digitized by Google

Digitized by Google

Digitized by Google

Digitized by Google

Digitized by Google

Digitized by Google